LOOP Training

Analog loop：

1、stable state and FFT
2、vector network Analyzer manual
3、self-oscillation conditions
4、phase margin 45°，Gain margin -10dB criterion
5、zero point and pole point characteristic
6、pole-zero point compensation circuit
7、LCR network frequency characteristic
8、system transfer function
9、voltage ripple

Digital loop：

10、continue domain to discrete domain,c2d
11、Tustin bilinear transformation analysis
12、 Matlab calculate difference Equation coefficient
13、 pole-zero point compensation circuit to discrete domain
14、Butterworth low pass filter
15、 incremental PID control algorithm
16、digital flyback power block

System block

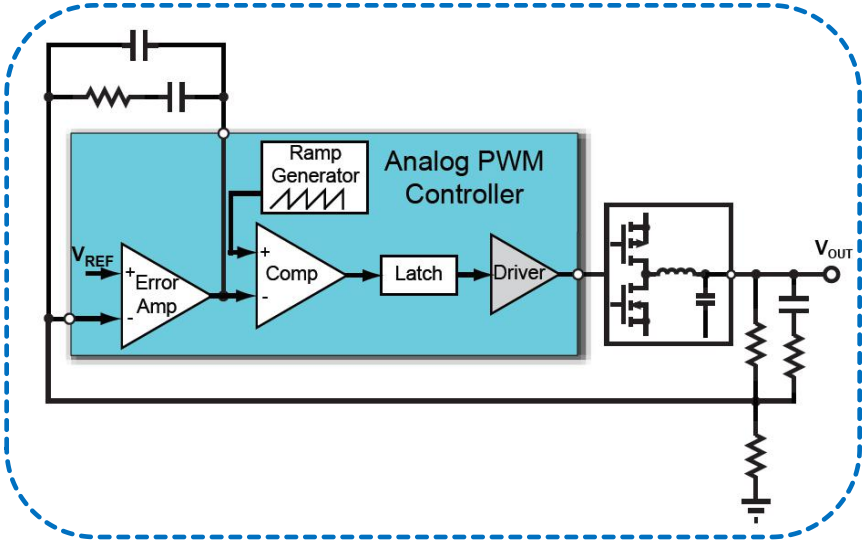

Analog loop

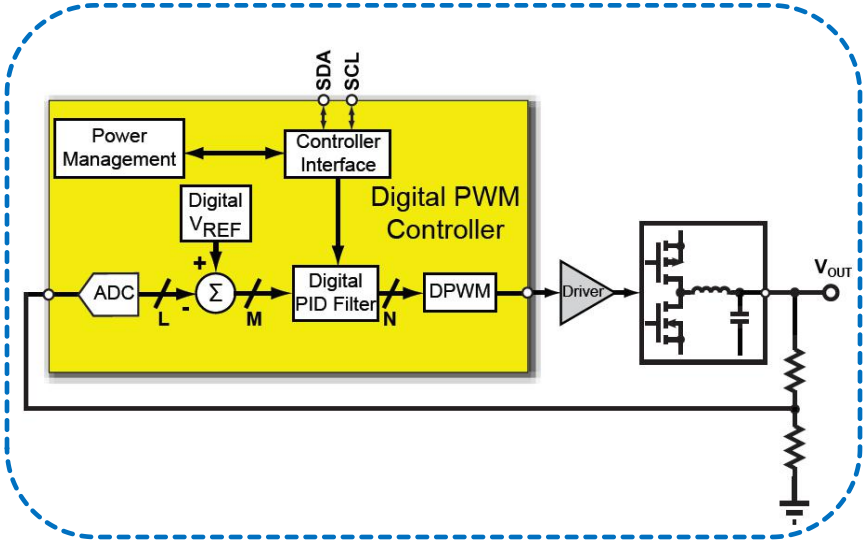

Digital loop

- Amplifier
- Comparator
- Lantch

- ADC
- Timer
- PID/loop alogrithm

This picture is provided by iwatt,campbell.

Stable state and FFT

Time domain characteristic： current period repeat the state of last period, and the next period will repeat the state of current period, duty is fixed.(for example duty=0.5)

frequency domain characteristic： Harmonic amplitude of FFT transformation gradually attenuates.

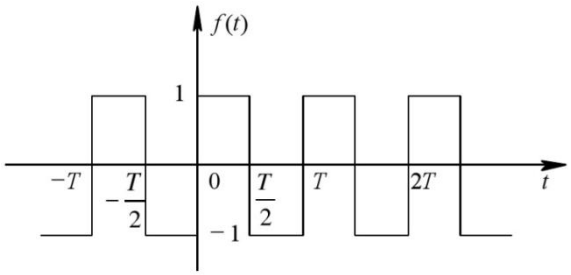

$$f(t)=\frac{4}{\pi}[\sin 2\pi ft+\frac{1}{3}\sin 6\pi ft+\frac{1}{5}\sin 10\pi f+\cdots+\frac{1}{n}\sin 2\pi ft+\cdots]$$

$$n=1,3,5,\cdots$$

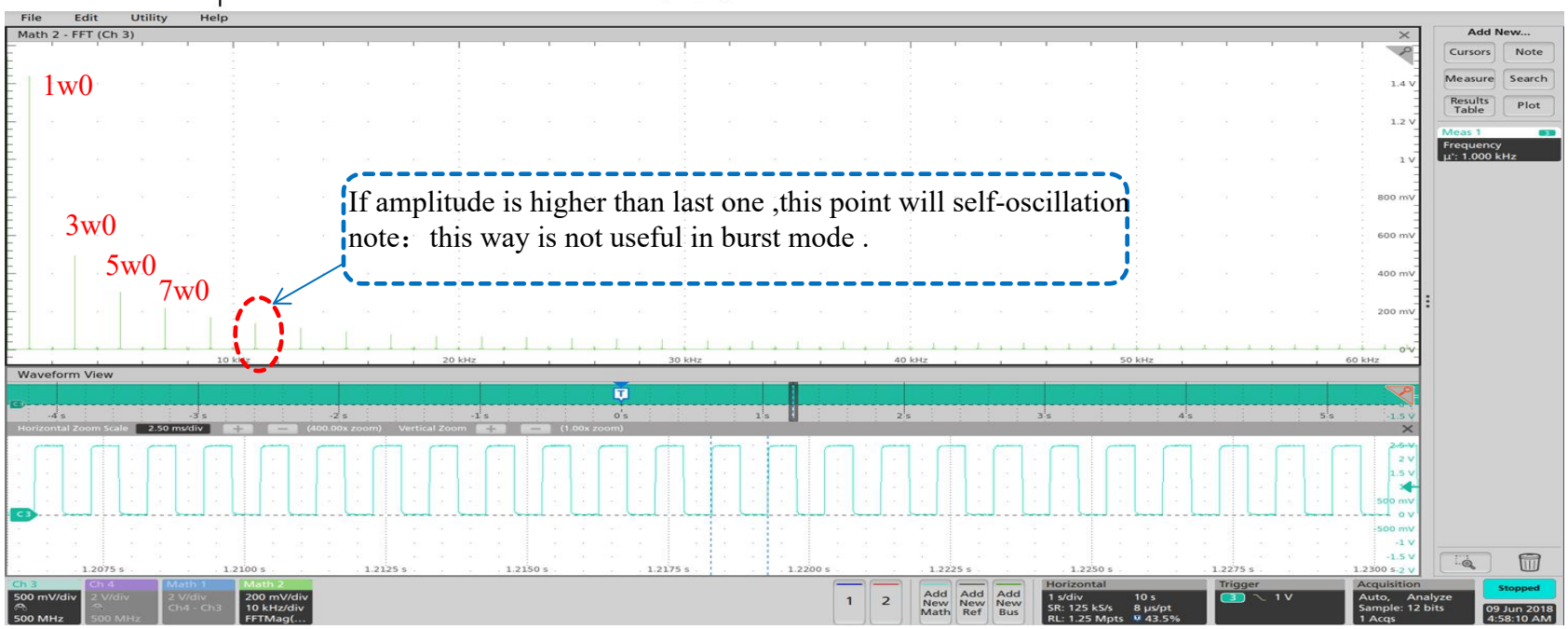

vector network Analyzer manual

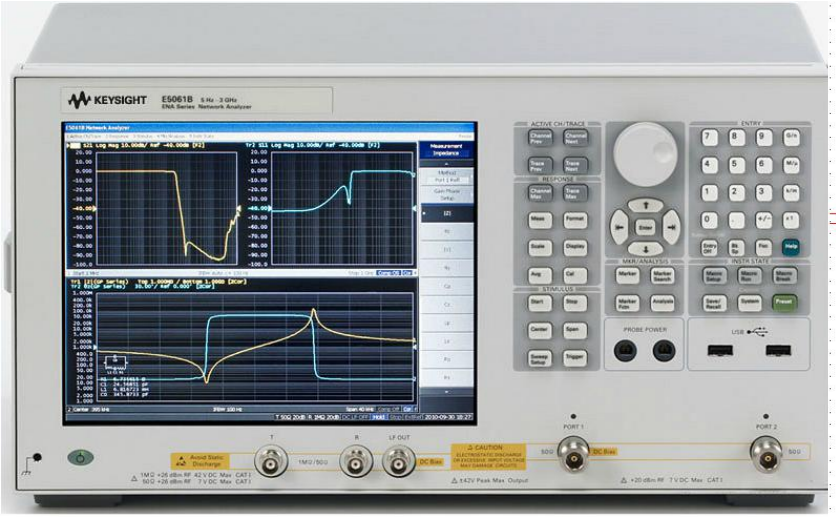

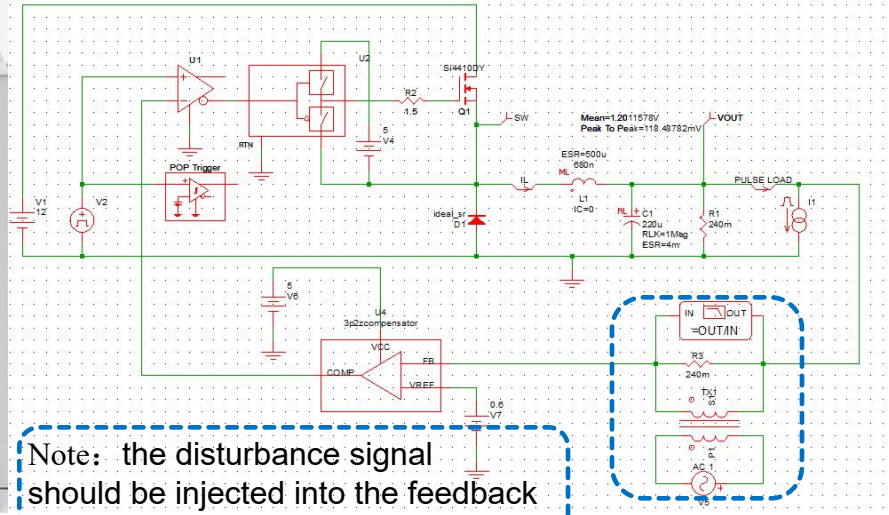

Note：the disturbance signal should be injected into the feedback loop by isolation transformer.

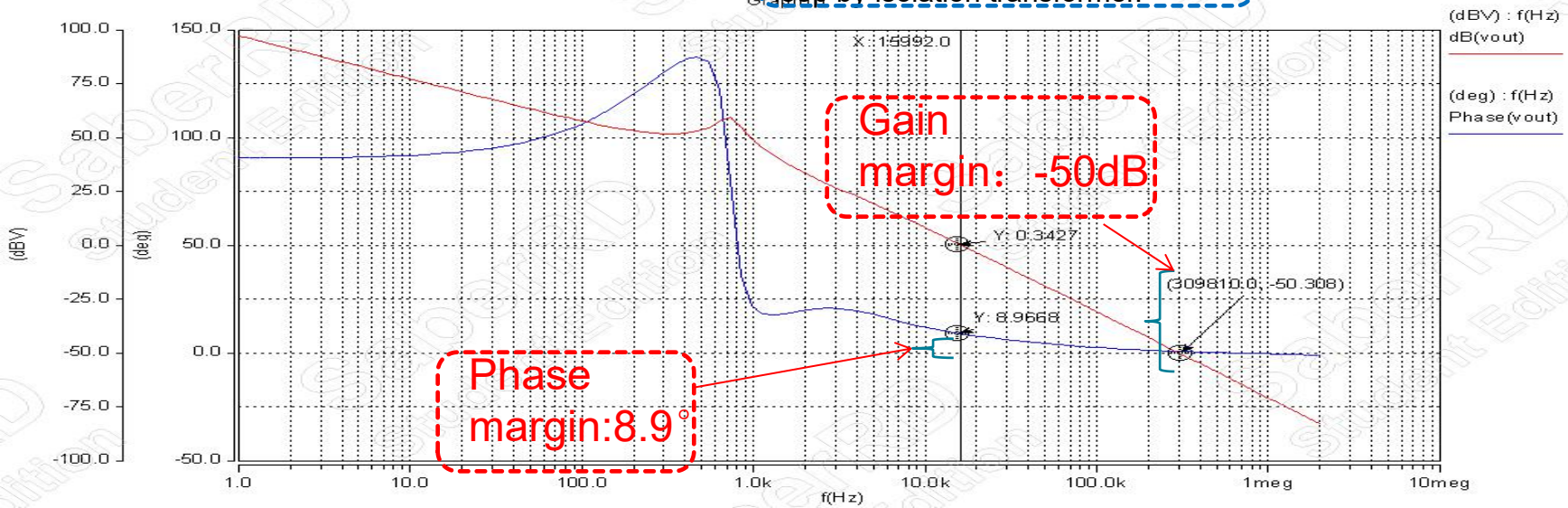

one pole point(1p)

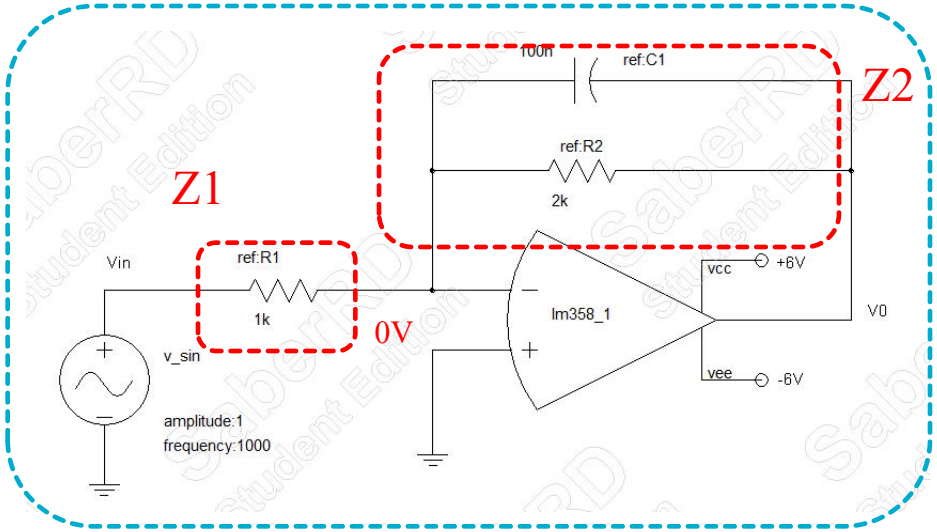

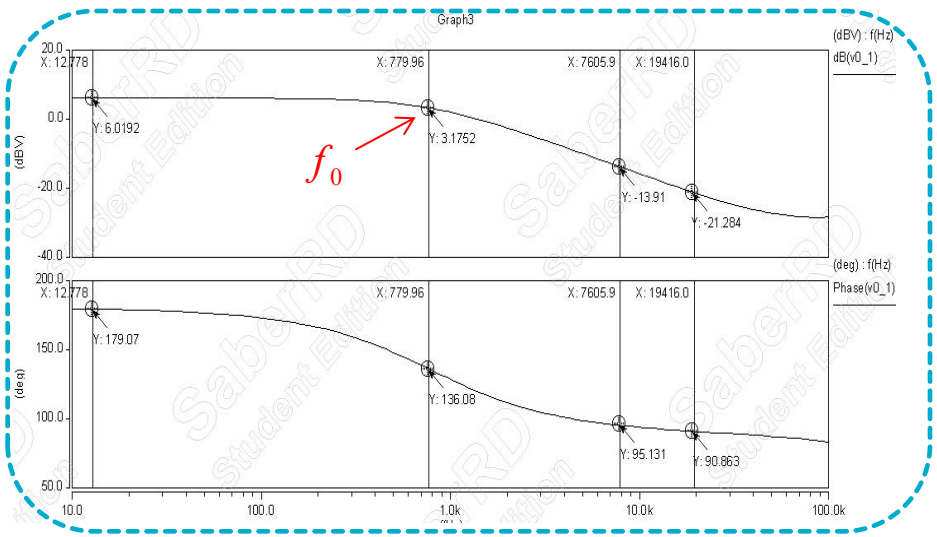

Small signal analysis:

$$Z_1 = R1 \qquad Z_2 = R_2 // \frac{1}{jwc_1}$$

$$\frac{Vin-0}{Z_1} = \frac{0-V_0}{Z_2} \longrightarrow H(s) = \frac{-Vo}{Vin} = \frac{-R_2}{R_1} \times \frac{1}{1+SR_2C_1}$$

$$20\lg H(s) = 20\lg\left(\frac{R_2}{R_1}\frac{1}{\sqrt{1+(SR_2C_1)^2}}\right) \approx 20\lg\frac{R_2}{R_1} - 20\lg wR_2C_1$$

$$\theta = -\arctan\frac{f}{f_0} \qquad f_0 = \frac{1}{2\pi R_2C_1} = 800Hz$$

$$-20\lg wR_2C_2 = -3dB$$

Description: Gain will decrease to infinitely small with frequency increase.

Position: $f_0 = \frac{1}{2\pi R_2C_1}$

magnitude-frequency characteristic :-20dB/10Wo

Phase-frequency characteristic : Max phase shift is 90° ,45° @ pole point

one zero point(1z)

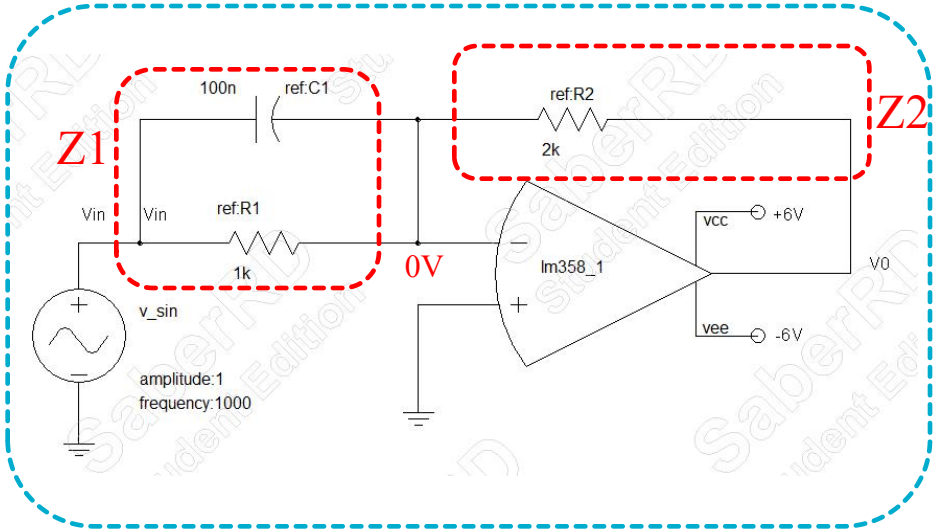

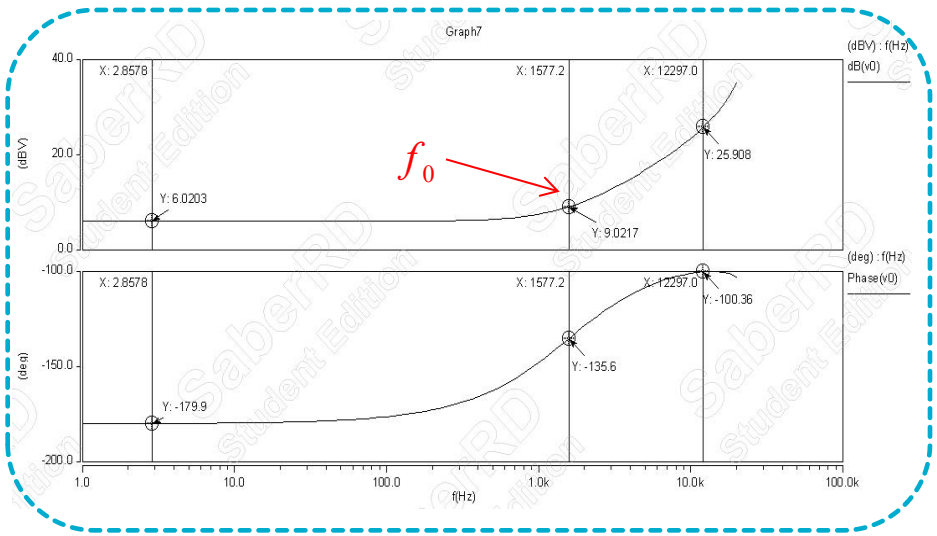

Small signal analysis:

$$Z_1 = R_1 // \frac{1}{jwc_1} \qquad Z_2 = R_2 \qquad S = jw$$

$$\frac{Vin-0}{Z_1} = \frac{0-V_0}{Z_2} \longrightarrow H(s) = \frac{-Vo}{Vin} = \frac{-R_2}{R_1} \times (1+SR_1C_1)$$

$$20\lg H(s) = 20\lg(\frac{R_2}{R_1}\sqrt{1+(SR_1C_1)^2}) \approx 20\lg\frac{R_2}{R_1} + 20\lg wR_1C_1$$

$$\theta = \arctan\frac{f}{f_0} \qquad f_0 = \frac{1}{2\pi R_1C_1} = 1600Hz \qquad 20\lg wR_1C_1 = 3dB$$

Description: Gain will increase to infinitely max with frequency increase.

Position: $f_0 = \frac{1}{2\pi R_1C_1}$

magnitude-frequency characteristic :20dB/10Wo

Phase-frequency characteristic : Max phase shift is 90° ,45° @ pole point

one pole with one zero point(1p1z)

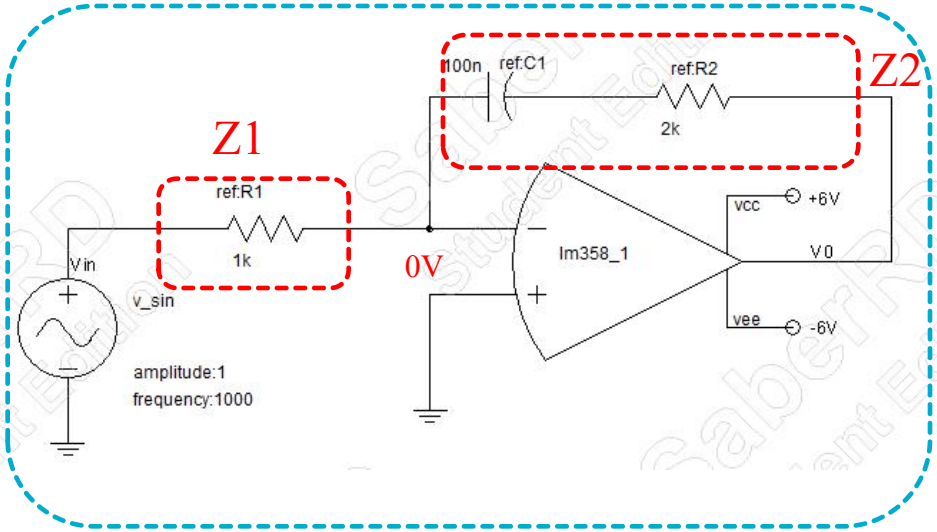

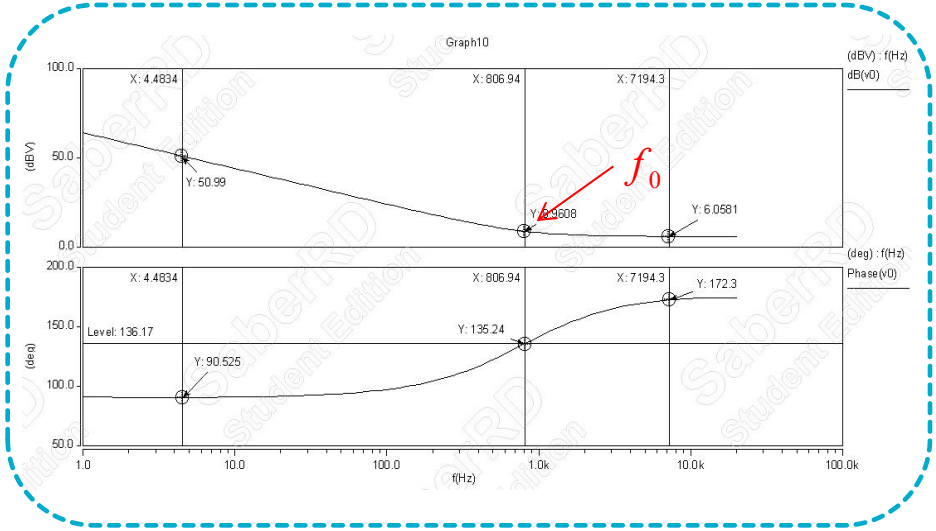

Small signal analysis:

$$Z_1 = R_1 \qquad Z_2 = R_2 + \frac{1}{jwc_2} \qquad S = jw$$

$$\frac{Vin - 0}{Z_1} = \frac{0 - V_0}{Z_2} \longrightarrow H(s) = \frac{-Vo}{Vin} = \frac{(1 + SR_2C_1)}{SR_1C_1}$$

$$20\lg H(s) = 20\lg\left(\frac{|1 + SR_2C_1|}{|SR_1C_1|}\right) \approx 20\lg\frac{R_2}{R_1}$$

$$\theta = \arctan\frac{f_0}{f} \qquad f_0 = \frac{1}{2\pi R_2C_1} = 800Hz$$

Pole point position: 0Hz

Zero point position: 800Hz

magnitude-frequency characteristic :+0dB/10Wo

Phase-frequency characteristic : Max phase shift is 0° ,45° @ pole point

one pole with two zero point(1p2z)

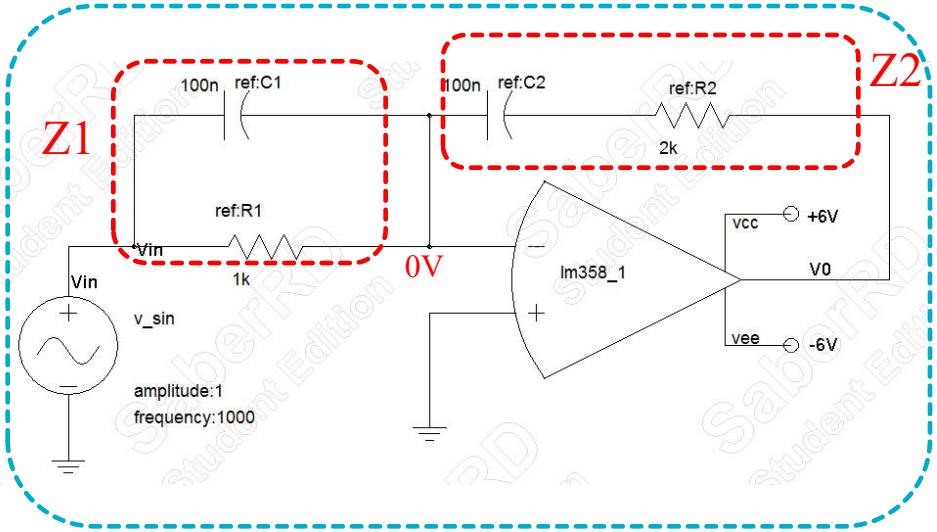

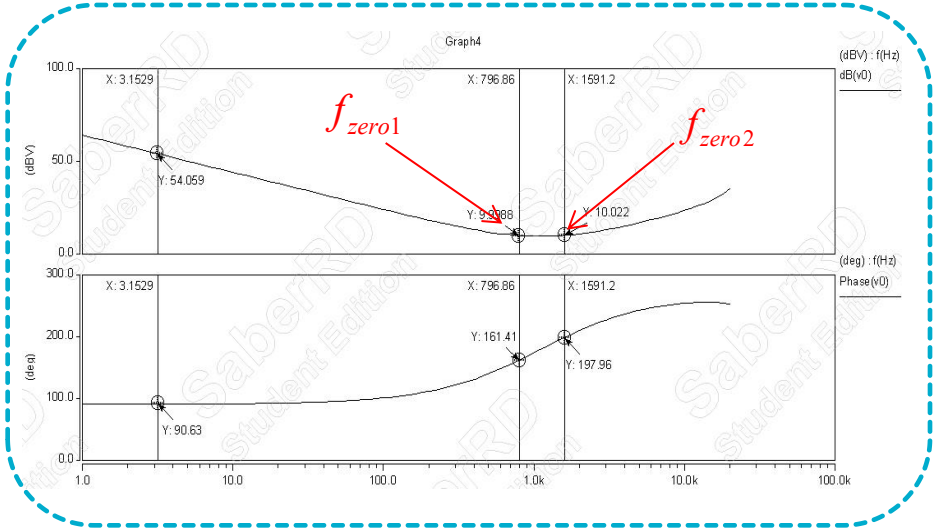

Small signal analysis:

$$Z_1 = R_1 // \frac{1}{jwC_1} \qquad Z_2 = R_2 + \frac{1}{jwc_2} \qquad S = jw$$

$$\frac{Vin - 0}{Z_1} = \frac{0 - V_0}{Z_2} \longrightarrow H(s) = \frac{-Vo}{Vin} = \frac{(1+SR_1C_1)(1+SR_2C_2)}{SR_1C_2}$$

$$f_{zero1} = \frac{1}{2\pi R_1 C_1} = 800Hz \qquad f_{zero2} = \frac{1}{2\pi R_2 C_2} = 1600Hz$$

$$20\lg H(s) \approx 20\lg \frac{R_2}{R_1} \quad (f_{zero1} < f < f_{zero2})$$

Pole point position: 0Hz

Zero point position: 800Hz / 1600Hz

magnitude-frequency characteristic :

Phase-frequency characteristic :

two pole point with one zero point(2p1z)

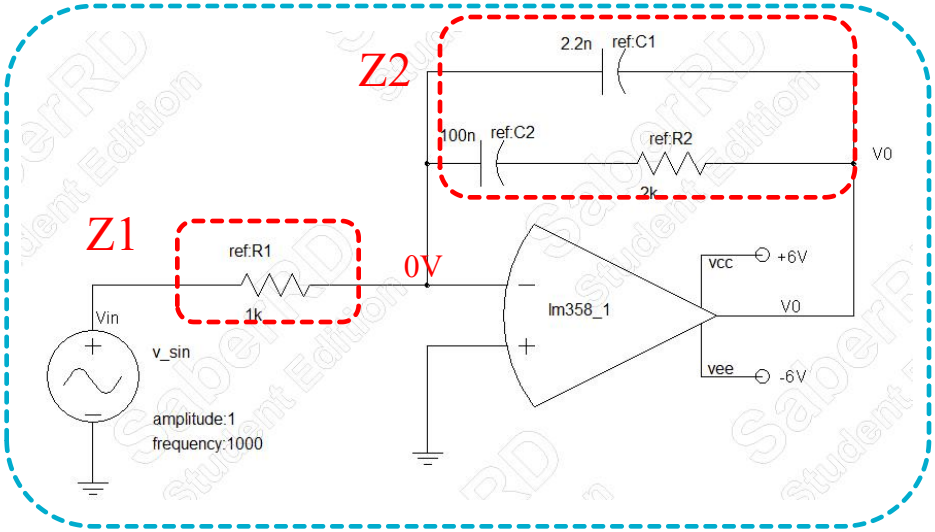

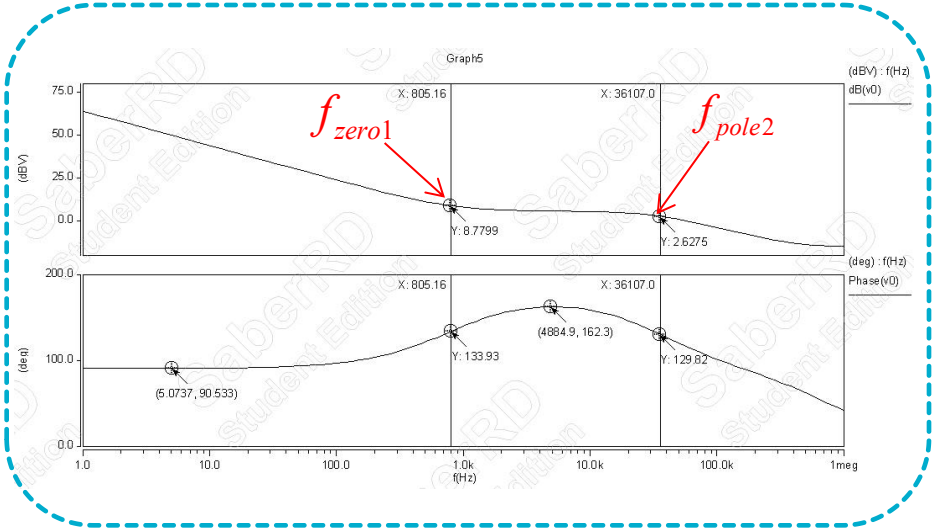

Small signal analysis:

$$Z_1 = R1 \qquad Z_2 = (R_2 + \frac{1}{jwC_2}) // \frac{1}{jwC_1} \qquad S = jw$$

$$\frac{Vin - 0}{Z_1} = \frac{0 - V_0}{Z_2} \longrightarrow$$

$$H(s) = \frac{-Vo}{Vin} = \frac{(1 + SR_2C_2)}{SR_1(C_1 + C_2)(1 + SR_2 \frac{C_1C_2}{C_1 + C_2})}$$

$$f_{zero1} = \frac{1}{2\pi R_2 C_2} = 800Hz \qquad f_{pole2} = \frac{1}{2\pi R_2 \frac{C_1C_2}{C1+C_2}} \approx 36kHz$$

Pole point position: 0Hz/36kHz

Zero point position: 800Hz

magnitude-frequency characteristic :

Phase-frequency characteristic :

two pole with two zero point(2p2z)

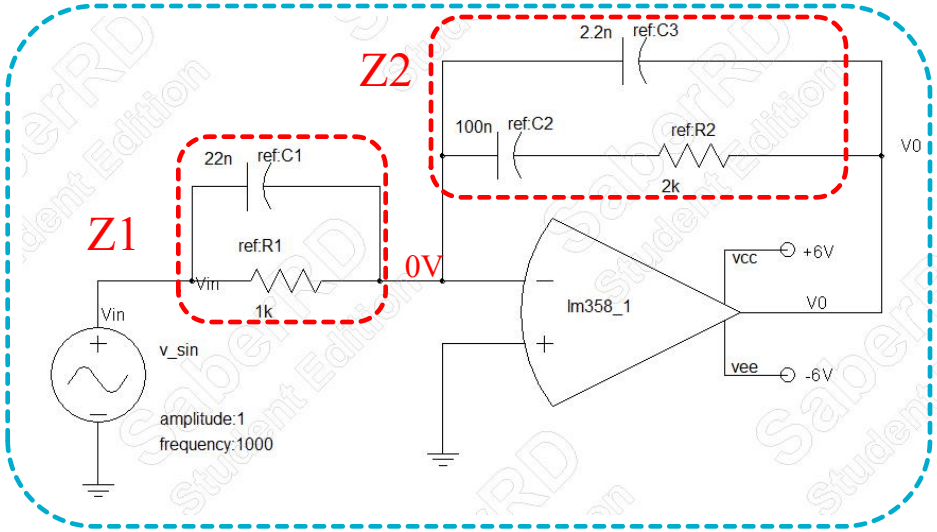

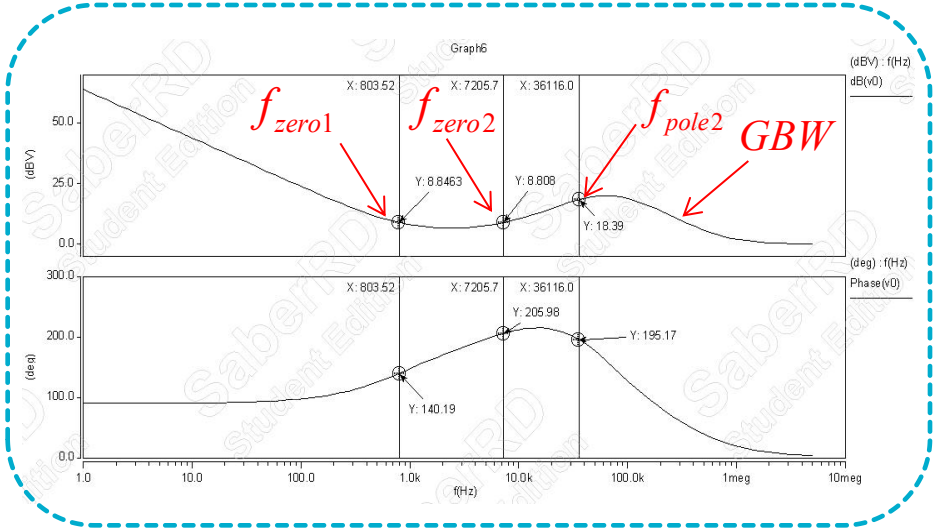

Small signal analysis:

$$Z_1 = R1 // \frac{1}{jwC_1} \qquad Z_2 = (R_2 + \frac{1}{jwC_2}) // \frac{1}{jwC_3} \qquad S = jw$$

$$\frac{Vin - 0}{Z_1} = \frac{0 - V_0}{Z_2} \longrightarrow$$

$$H(s) = \frac{-Vo}{Vin} = \frac{(1 + SR_2C_2)(1 + SR_1C_1)}{SR_1(C_2 + C_3)(1 + SR_2 \frac{C_2C_3}{C_2 + C_3})}$$

$$f_{zero1} = \frac{1}{2\pi R_2C_2} 800Hz \qquad f_{zero2} \approx \frac{1}{2\pi R_1C_1} = 7.2kHz$$

$$f_{pole1} = 0Hz \qquad f_{pole2} = \frac{1}{2\pi R_2 \frac{C_2C_3}{C_2 + C_3}} = 36kHz$$

Pole point position: 0Hz/36kHz

Zero point position: 800Hz/7.2kHz

magnitude-frequency characteristic :

Phase-frequency characteristic :

three pole with two zero point(3p3z)

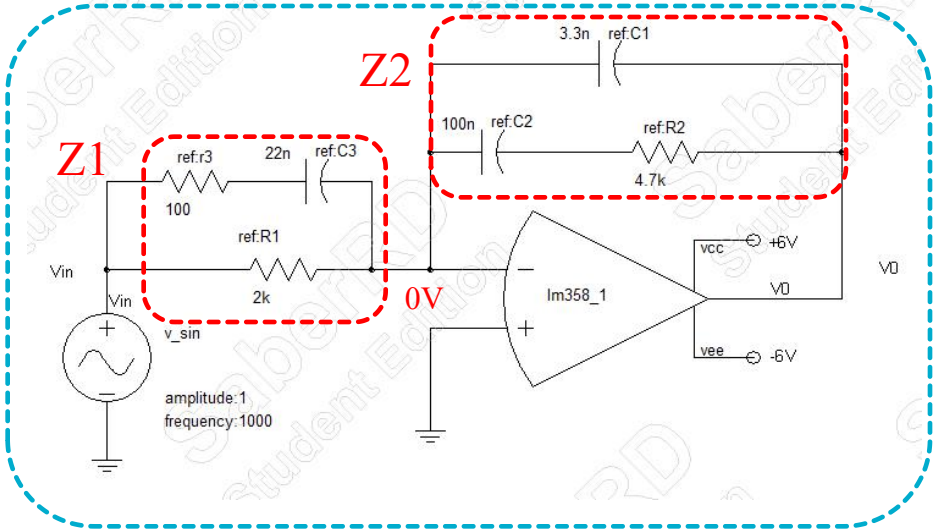

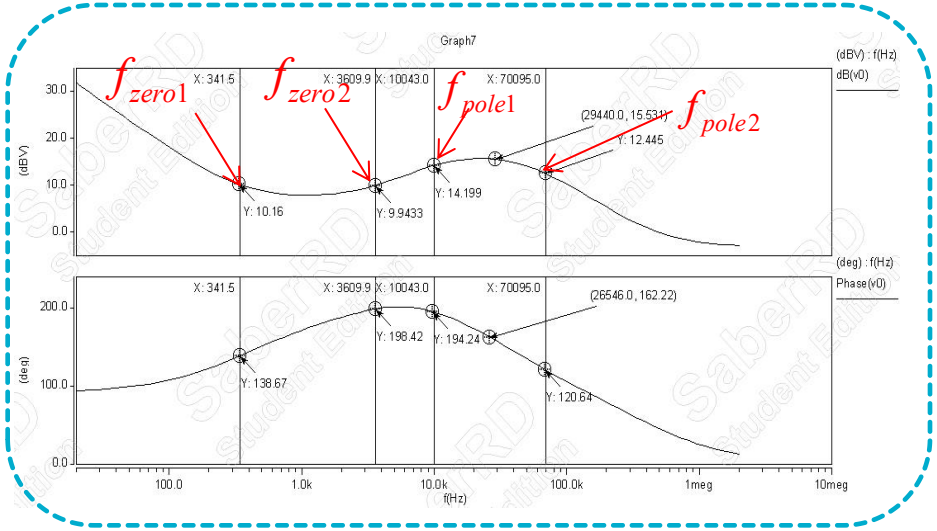

Small signal analysis:

$$Z_1 = R1 // \frac{1}{jwC_1} \qquad Z_2 = (R_2 + \frac{1}{jwC_2}) // \frac{1}{jwC_3} \qquad S = jw$$

$$\frac{Vin - 0}{Z_1} = \frac{0 - V_0}{Z_2} \longrightarrow$$

$$H(s) = \frac{-Vo}{Vin} = \frac{R_1 + R_3}{R_1 R_3 C_1} \times \frac{(S + \frac{1}{R_2 C_2})(S + \frac{1}{(R_1 + R_3)C_3})}{S(S + \frac{C_1 + C_2}{R_2 C_1 C_2})(S + \frac{1}{R_3 C_3})}$$

$$f_{zero1} = \frac{1}{2\pi R_2 C_2} \approx 340Hz \qquad f_{zero2} = \frac{1}{2\pi (R_1 + R_3) C_3} \approx 3.6kHz$$

$$f_{pole1} = \frac{1}{2\pi R_2 \frac{C_1 C_2}{C_1 + C_2}} \approx 10kHz \qquad f_{pole2} = \frac{1}{2\pi R_3 C_3} \approx 72kHz$$

Pole point position: 10kHz/72kHz

Zero point position: 340Hz/3.6kHz

magnitude-frequency characteristic :

Phase-frequency characteristic :

TL431+817

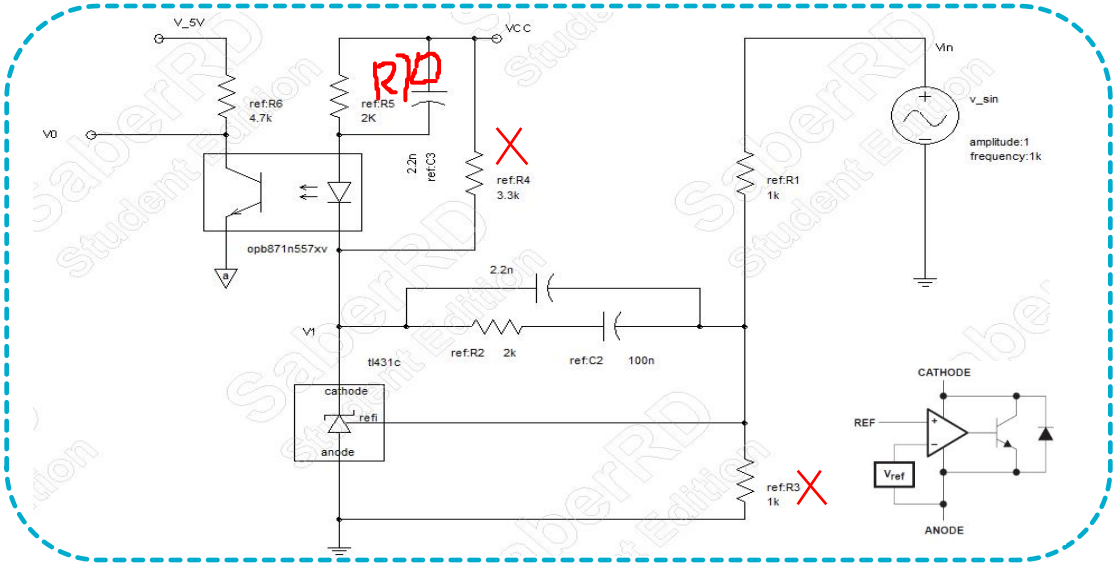

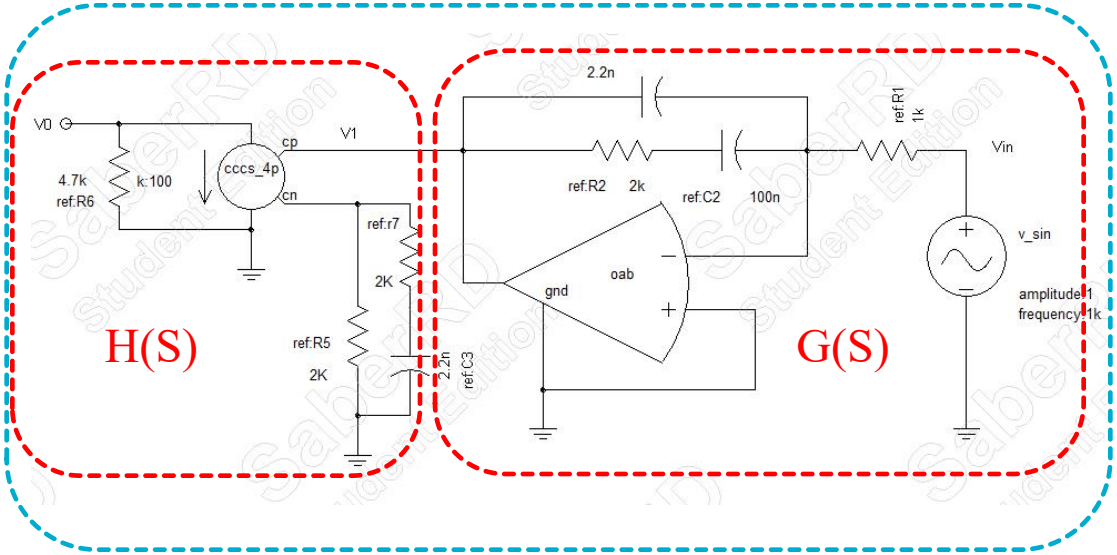

Small signal analysis:

$$V_0 = -\frac{V_1}{R5//(R_7 + \frac{1}{jwc_3})} \times CTR \times R_6 \quad S = jw$$

$$H(s) = \frac{V_0}{V_1} = -CTR \times \frac{R_6 R_5 (1 + SC_3 R_7)}{1 + SC_3 (R_5 + R_7)}$$

$$G(s) = \frac{V_0}{Vin} = -\frac{(1 + SR_2 C_2)}{SR_1 (C_1 + C_2)(1 + SR_2 \frac{C_1 C_2}{C_1 + C_2})}$$

$$F(s) = \frac{(1 + SR_2 C_2)}{SR_1 (C_1 + C_2)(1 + SR_2 \frac{C_1 C_2}{C_1 + C_2})} \times CTR \times \frac{R_6 R_5 (1 + SC_3 R_7)}{1 + SC_3 (R_5 + R_7)}$$

we can add one zero point R7 with c3 to offset the pole of the optocoupler

LCR

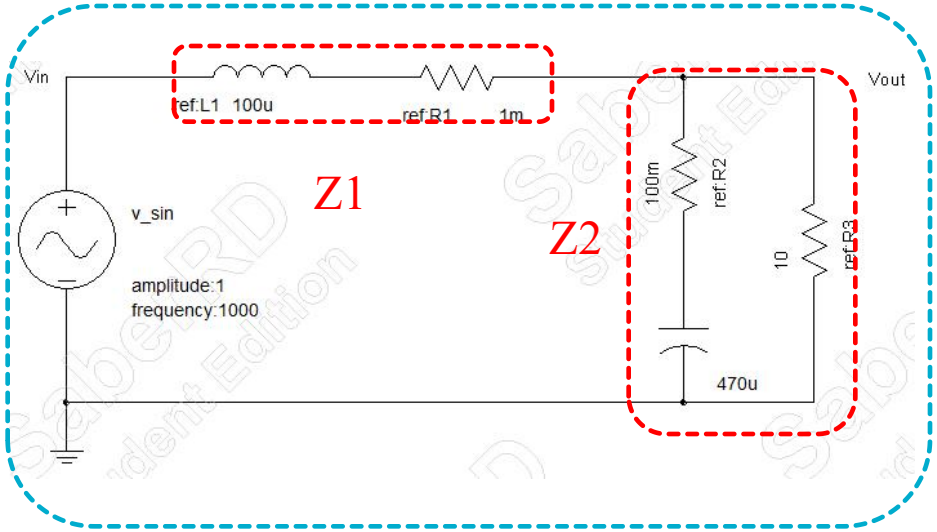

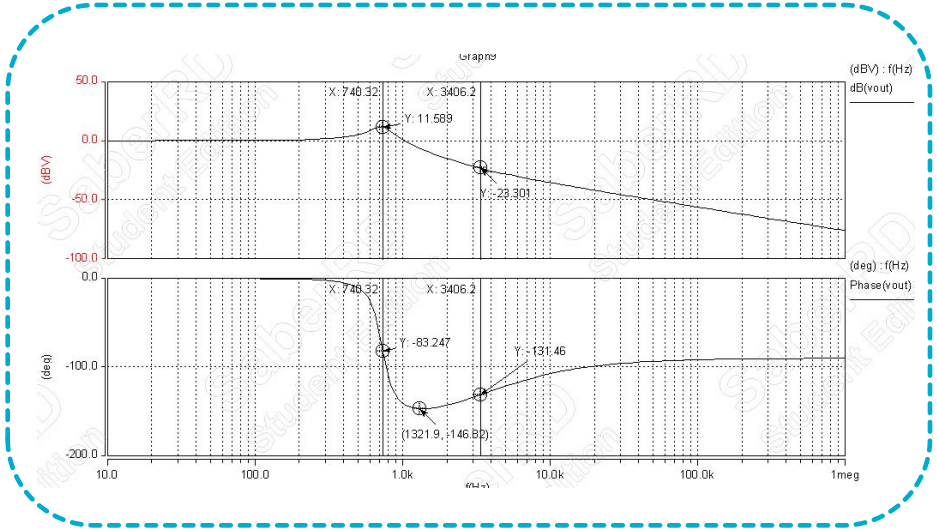

Small signal analysis:

$$Z_1 = jwL + R_L \qquad Z_2 = (\frac{1}{jwC} + R_C)//R_3 \quad S = jw$$

$$H(s) = \frac{Vo}{Vin} = \frac{Z_2}{Z_1 + Z_2} =$$

$$= \frac{(1+SR_2C)R_3}{S^2LC(R_2+R_3)+S[L+(R_1R_2+R_1R_3+R_2R_3)C]+R_1+R_3}$$

$$= \frac{(1+SR_2C)R_3}{S^2LCR_3+S[L+2R_3)C]+1} \approx \frac{1+SR_2C}{S^2LC+1}$$

$$f_{zero} = \frac{1}{2\pi R_2 C} \approx 3.4kHz$$

$$f_{pole} = \frac{1}{2\pi\sqrt{LC}} \approx 740Hz$$

Pole point position: 740Hz(double pole)

Zero point position: 3.4kHz

magnitude-frequency characteristic :

Phase-frequency characteristic :

Open loop

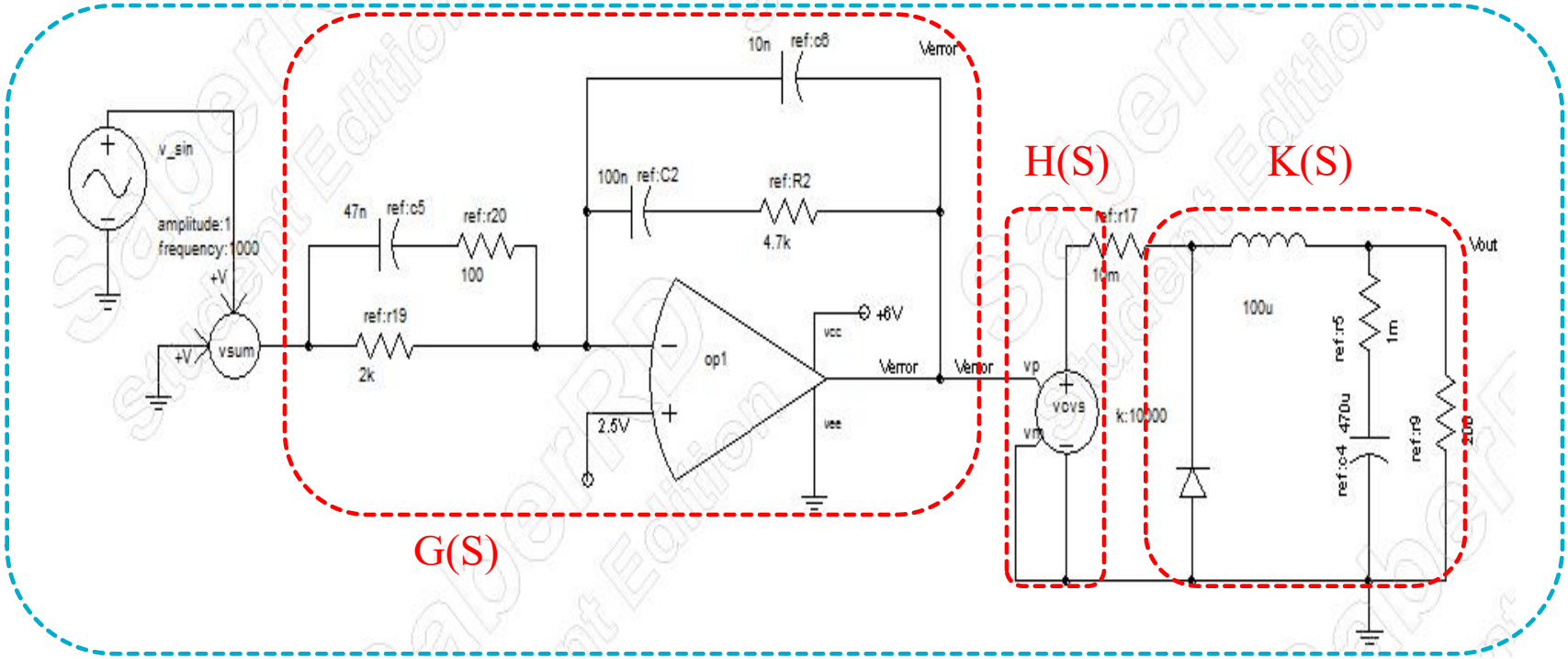

$$F(s)=G(S)\times H(S)\times K(S)=\frac{R_1+R_3}{R_1R_3C_1}\times\frac{(S+\frac{1}{R_2C_2})(S+\frac{1}{(R_1+R_3)C_3})}{S(S+\frac{C_1+C_2}{R_2C_1C_2})(S+\frac{1}{R_3C_3})}\times 10^4\times\frac{1+SR_cC}{S^2LC+1}\qquad S=jw$$

Open loop

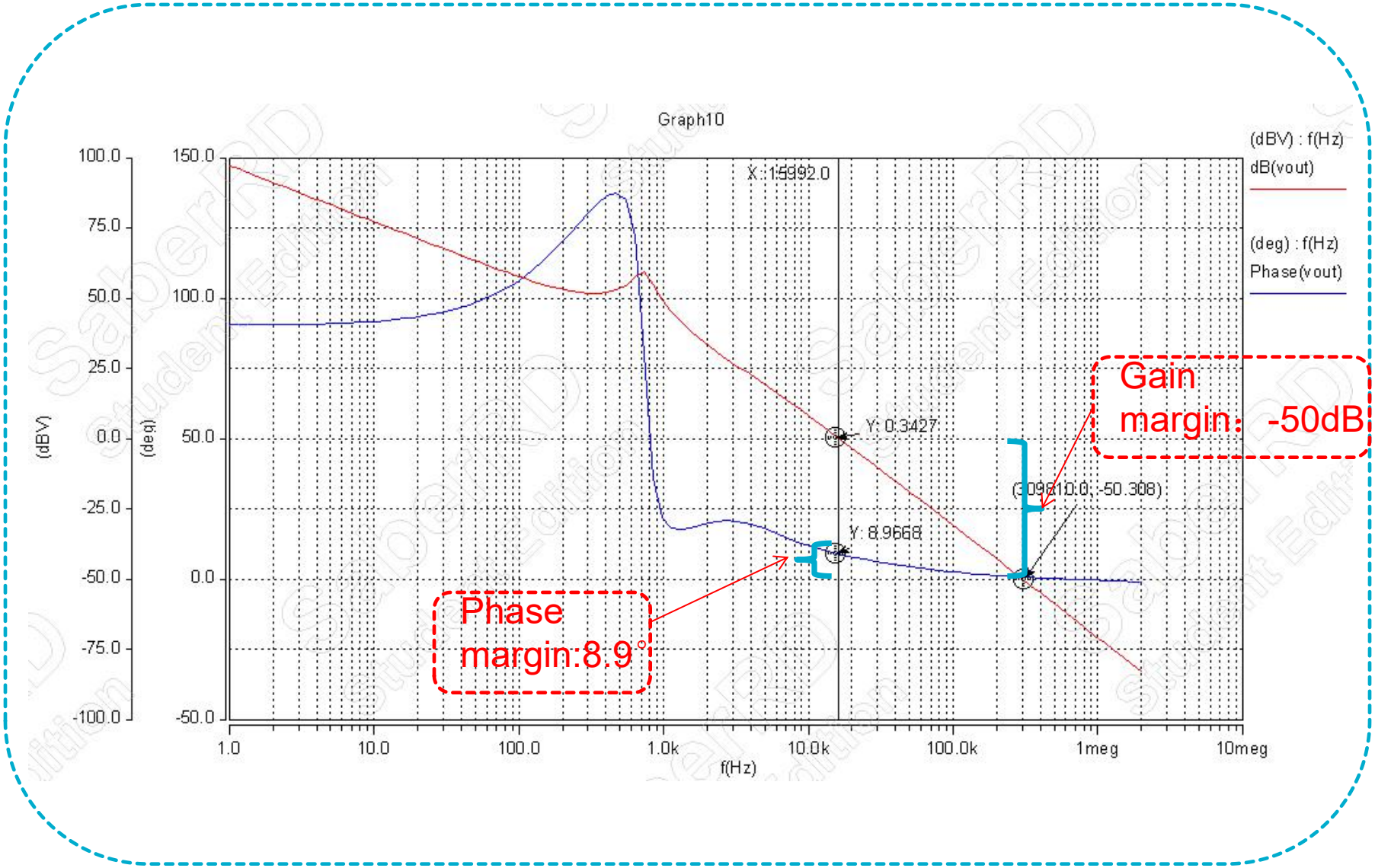
Graph10
(dBV) : f(Hz)
dB(vout)
(deg) : f(Hz)
Phase(vout)
X: 15992.0
Y: 0.3427
Y: 8.9668
(309810.0, -50.308)
Gain margin: -50dB
Phase margin:8.9°
(dBV)
(deg)
100.0
75.0
50.0
25.0
0.0
-25.0
-50.0
-75.0
-100.0
150.0
100.0
50.0
0.0
-50.0
1.0
10.0
100.0
1.0k
10.0k
100.0k
1meg
10meg
f(Hz)

Open loop

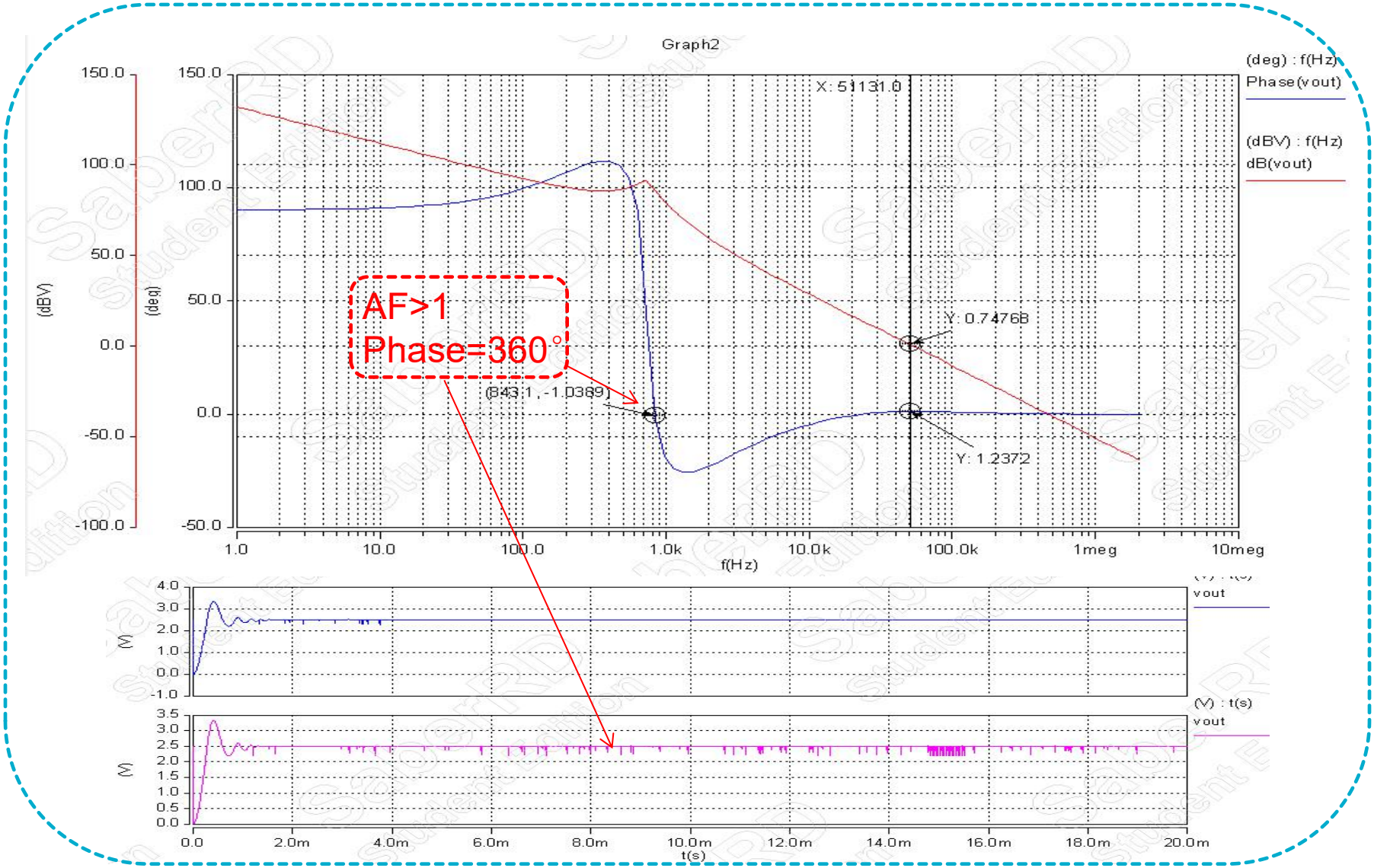
Graph2
(deg) : f(Hz)
Phase(vout)
(dBV) : f(Hz)
dB(vout)
X: 51131.0
Y: 0.74768
Y: 1.2372
(843.1, -1.0389)
AF>1
Phase=360°
(dBV)
(deg)
f(Hz)
(V)
vout
(V) : t(s)
t(s)

C2d,continue domain to discrete domain

$$X(\mathrm{jw}) = \int_{-\infty}^{+\infty} x(t) e^{-jwt} dt \xleftrightarrow{\text{FT}} x(\mathrm{t}) = \frac{1}{2\pi}\int_{-\infty}^{+\infty} X(jw) e^{jwt} dw \qquad Note: s = jw$$

Fourier transform

$$X(e^{jw}) = \sum_{n=-\infty}^{+\infty} x[n] e^{-jwn} \xleftrightarrow{\text{FT}} x[n] = \frac{1}{2\pi}\int_{2\pi} X(e^{jw}) e^{jwn} dw \qquad Note: s = jw$$

$$X(\sigma + \mathrm{jw}) = \int_{-\infty}^{+\infty} x(t) e^{-\sigma t} e^{-jwt} dt \xleftrightarrow{\text{LS}} x(\mathrm{t}) = \frac{1}{2\pi}\int_{-\infty}^{+\infty} X(\sigma + jw) e^{\sigma t} e^{jwt} dw \qquad Note: s = \sigma + jw$$

Laplace transform

$$X(e^{jw}) = \sum_{n=-\infty}^{n=+\infty} x[n] e^{-jwn} \xleftrightarrow{\text{Z}} X(n) = \frac{1}{2\pi}\oint X(e^{jw}) e^{jw(n-1)} dz \qquad Note: z = e^{jw}$$

Z transform

$$x(t) \xrightarrow{\text{Uniform sampling}} x(\mathrm{n}) \qquad L[x(t)] = X(s) \qquad Z[x(\mathrm{n})] = X(z)$$

Tustin transform

How to transform X(s) to X(z), or how to transform X(z) to X(s) ? It's a question.

Tustin Tustin bilinear transformation: $S = \frac{2}{T}\frac{Z-1}{Z+1}$

$$X[n-1] \xleftrightarrow{\text{Z}} z^{-1}X[z] \longrightarrow z^{-1} \quad \text{1 unit time shift}$$

$$X[n-2] \xleftrightarrow{\text{Z}} z^{-2}X[z] \longrightarrow z^{-2} \quad \text{2 unit time shift}$$

$$X[n-2] \xleftrightarrow{\text{Z}} z^{-2}X[z] \longrightarrow z^{-2} \quad \text{3 unit time shift}$$

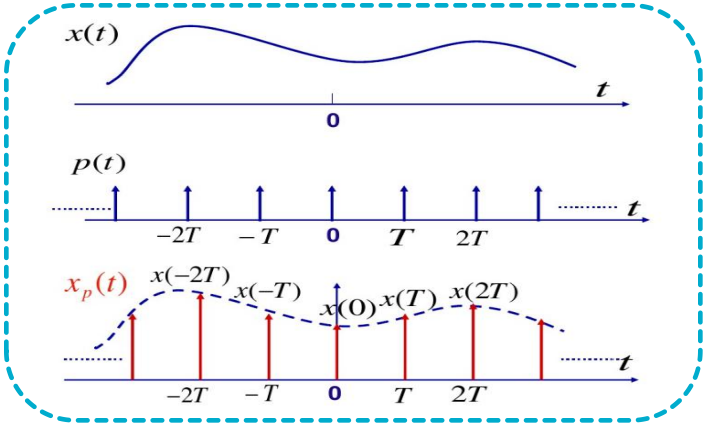

one pole point

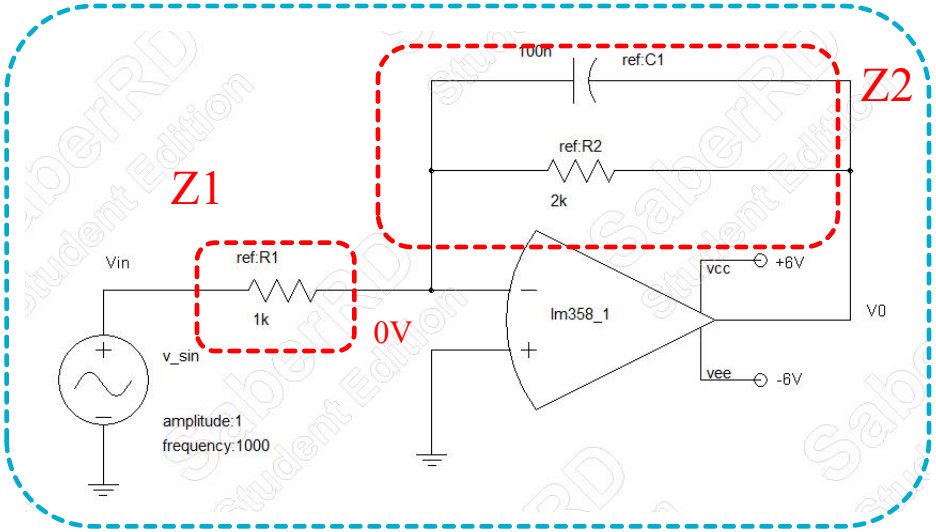

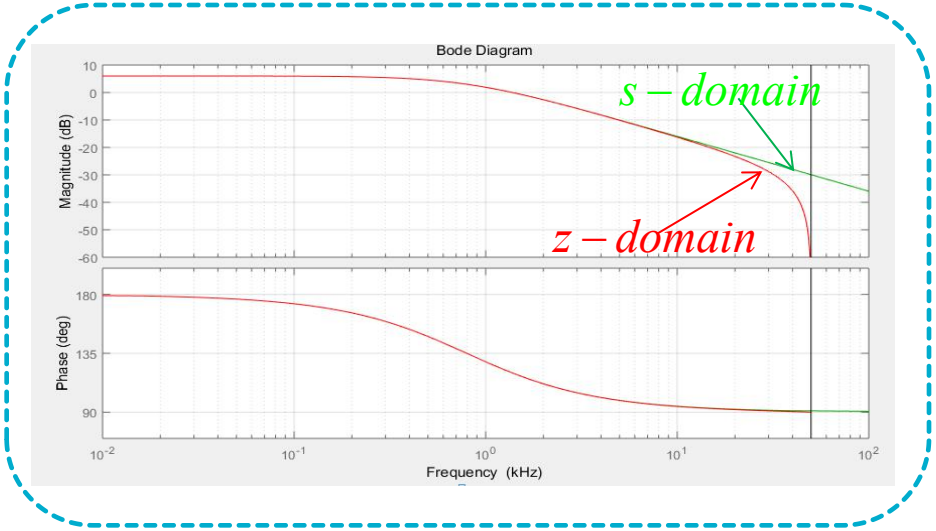

Small signal analysis:

$$H(s)=\frac{-Vo}{Vin}=\frac{-R_2}{R_1}\times\frac{1}{1+SR_2C_1} \qquad S=\frac{2}{T}\frac{Z-1}{Z+1}$$

$$H(z)=\frac{-R_2}{R_1}\times\frac{1}{1+SR_2C_1}\Big|_{s=\frac{2}{T}\frac{z-1}{z+1}} \qquad T=10uS$$

$$H(z)=\frac{Y(n)}{X(n)}=-2\frac{1}{1+\frac{2}{T}\frac{z-1}{z+1}\times 0.2\times 10^{-3}}$$

$$Y(n)=0.95Y(n-1)-0.049X(n)-0.049X(n-1)$$

```
%Matlab code
clear all;                                  %clear  old data
close all;                                  %close old file
Ts=10*10^(-6)                               %sampling period
Cont_s=tf(-2,[0.2*10^(-3),1])               %S domain function
bode(Cont_s,'g');grid on;hold on;           %S domain  bode
Cont_discret_s=c2d(Cont_s,Ts,'tustin')      %Z domain function
bode(Cont_discret_s,'r');grid on;hold on; %Z  domain bode
[num_z,den_z]=tfdata(Cont_discret_s,'v')%Equation coefficient

num_z = -0.0488   -0.0488
den_z =1.0000   -0.9512
```

If increase the sample frequency ,z domain will be more closed to s domain.

one zero point

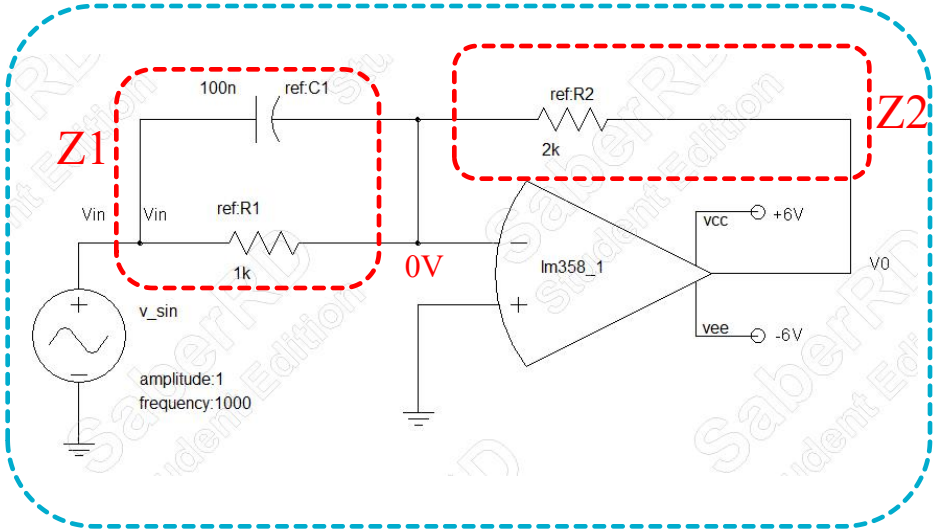

Small signal analysis:

$$H(s)=\frac{-Vo}{Vin}=\frac{-R_2}{R_1}\times(1+SR_1C_1) \qquad S=\frac{2}{T}\frac{Z-1}{Z+1}$$

$$H(z)=\frac{Y(n)}{X(n)}=\frac{-R_2}{R_1}\times(1+SR_1C_1)\Big|_{s=\frac{2}{T}\frac{z-1}{z+1}} \qquad T=10uS$$

$$Y(n)=-Y(n-1)-42X(n)+38X(n-1)$$

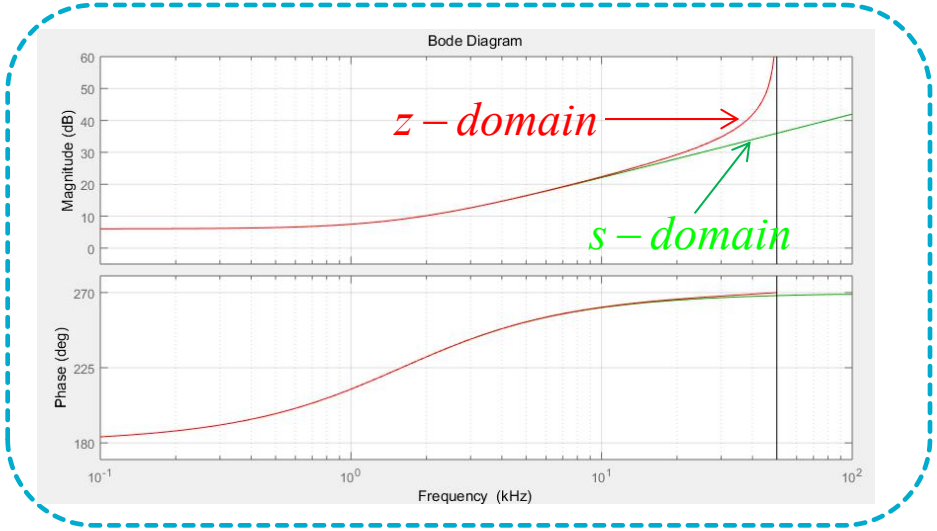


```
%Matlab code
clear all;                                  %clear  old data
close all;                                  %close old file
Ts=10*10^(-6)                               %sampling period
Cont_s=tf([-0.2*10^(-3),-2],1)              %S domain function
 bode(Cont_s,'g');grid on;hold on;          %S domain  bode
Cont_discret_s=c2d(Cont_s,Ts,'tustin')      %Z domain function
bode(Cont_discret_s,'r');grid on;hold on;   %Z  domain bode
[num_z,den_z]=tfdata(Cont_discret_s,'v')%Equation coefficient
```

num_z = -42.0000 38.0000
den_z = 1 1

one pole with one zero point

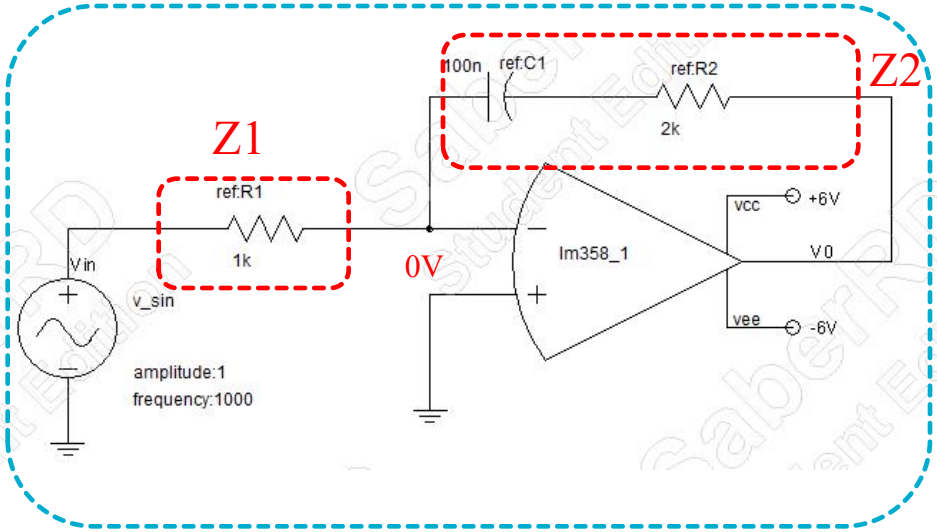

Small signal analysis:

$$H(s)=\frac{-Vo}{Vin}=-\frac{(1+SR_2C_1)}{SR_1C_1} \qquad S=\frac{2}{T}\frac{Z-1}{Z+1}$$

$$H(z)=\frac{Y(n)}{X(n)}=-\frac{(1+SR_2C_1)}{SR_1C_1}\Big|_{s=\frac{2}{T}\frac{z-1}{z+1}}$$

$$Y(n)=Y(n-1)-2.05X(n)+1.95X(n-1)$$

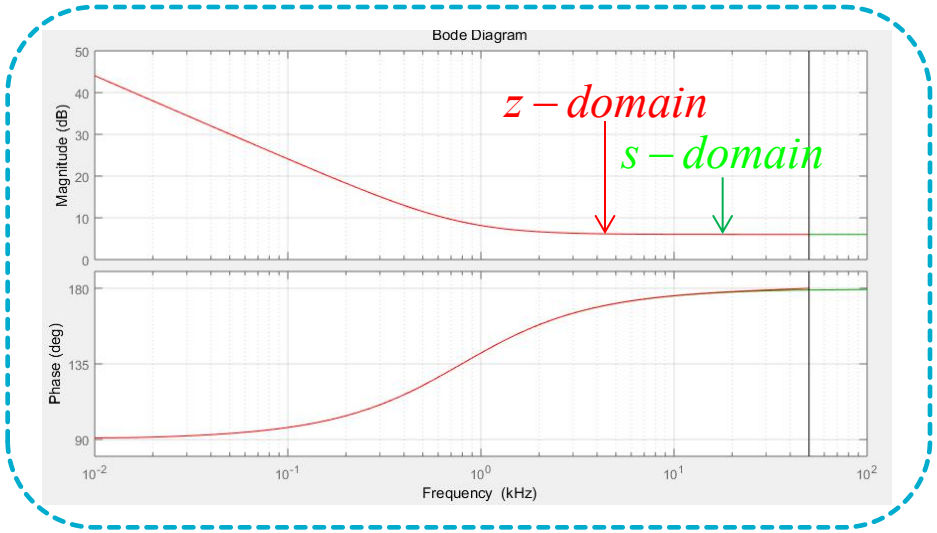


```
%Matlab code
clear all;                                      %clear  old data
close all;                                      %close old file
Ts=10*10^(-6)                                   %sampling period
Cont_s=tf([-0.2*10^(-3),-1],[0.1*10^(-3),0])%S domain function
 bode(Cont_s,'g');grid on;hold on;              %S domain  bode
Cont_discret_s=c2d(Cont_s,Ts,'tustin')          %Z domain function
bode(Cont_discret_s,'r');grid on;hold on;       %Z  domain bode
[num_z,den_z]=tfdata(Cont_discret_s,'v')        %Equation coefficient
```

num_z = -2.0500 1.9500
den_z = 1 -1

one pole with two zero point

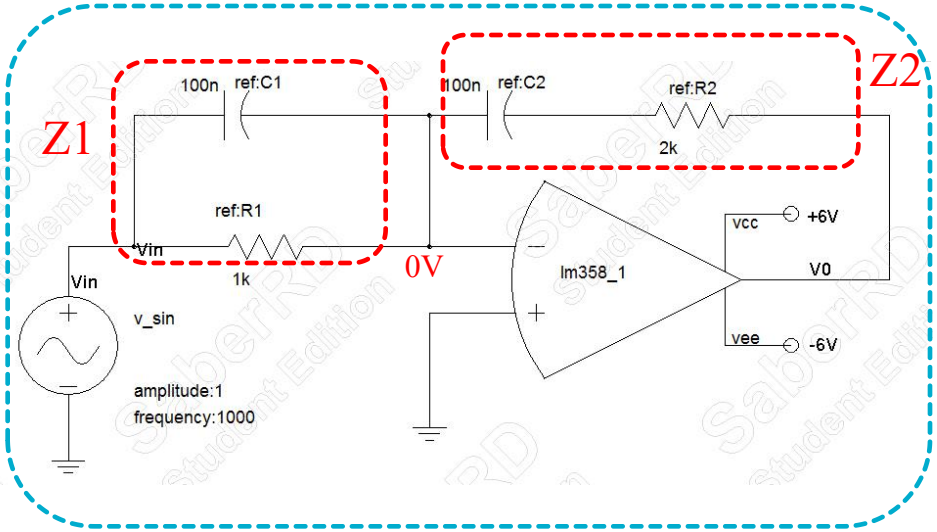

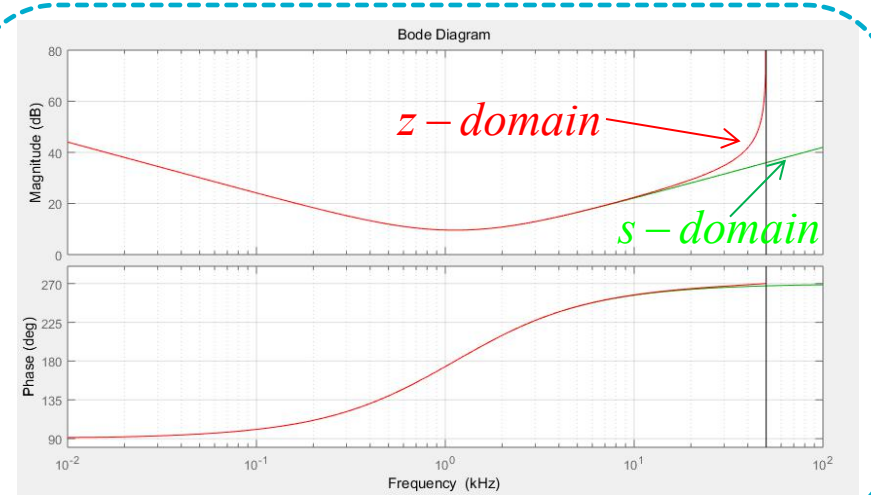

Small signal analysis:

$$H(s)=\frac{-Vo}{Vin}=\frac{(1+SR_1C_1)(1+SR_2C_2)}{SR_1C_2} \qquad S=\frac{2}{T}\frac{Z-1}{Z+1}$$

```
%Matlab code
clear all;                                  %clear  old data
close all;                                  %close old file
Ts=10*10^(-6)                               %sampling period
num_c=conv([-0.1*10^(-3),-1],[0.2*10^(-3),1]);
% numerator
den_c=conv([0.1*10^(-3),0],1);              %denominator
Cont_s=tf(num_c,den_c)                      %S domain function
 bode(Cont_s,'g');grid on;hold on;          %S domain  bode
Cont_discret_s=c2d(Cont_s,Ts,'tustin')      %Z domain function
bode(Cont_discret_s,'r');grid on;hold on;   %Z  domain bode
[num_z,den_z]=tfdata(Cont_discret_s,'v')%Equation coefficient
```

num_z =-43.0500 79.9000 -37.0500
den_z =1 0 -1

$$Y(n)=Y(n-2)-43.05X(n)+79X(n-1)$$
$$-37.05X(\mathrm{n}-2)$$

two pole with one zero point

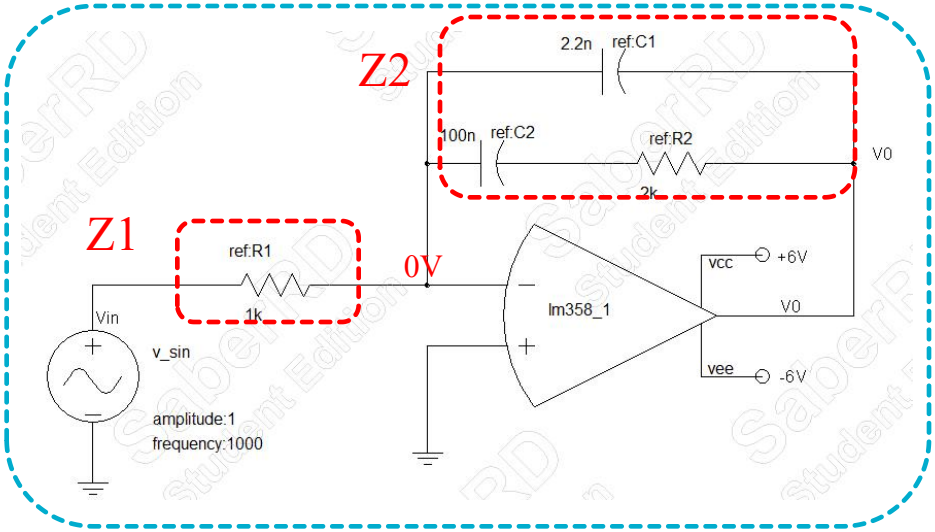

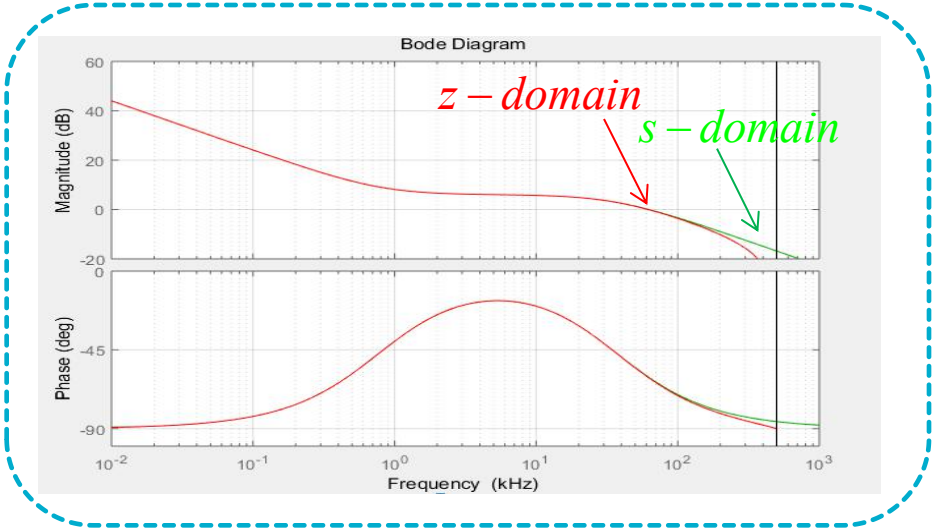

Small signal analysis:

$$H(s)=\frac{-Vo}{Vin}=\frac{(1+SR_2C_2)}{SR_1(C_1+C_2)(1+SR_2\frac{C_1C_2}{C_1+C_2})}\Big|_{S=\frac{2}{T}\frac{Z-1}{Z+1}}$$

```
%Matlab code
clear all;                                  %clear  old data
close all;                                  %close old file
Ts=1*10^(-6)                                %sampling period
num_c=conv([0.2*10^(-3),1],1);
%numerator
den_c=conv([0.1*10^(-3),0],[4.4*10^(-6),1]);
 %denominator
Cont_s=tf(num_c,den_c) %S domain function
 bode(Cont_s,'g');grid on;hold on;          %S domain  bode
Cont_discret_s=c2d(Cont_s,Ts,'tustin')   %Z domain function
bode(Cont_discret_s,'r');grid on;hold on; %Z  domain bode
[num_z,den_z]=tfdata(Cont_discret_s,'v')%Equation coefficient

num_z =0.2046    0.0010   -0.2036
den_z =1.0000   -1.7959    0.7959
```

$$Y(n)=1.8Y(n-1)-0.8Y(n-2)+0.205X(n)-0.204X(n-2)$$

two pole with two zero point

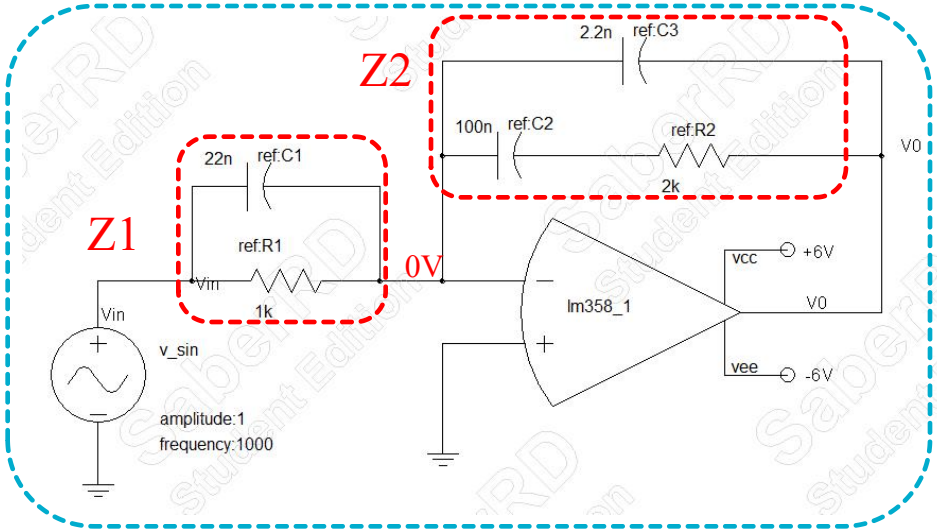

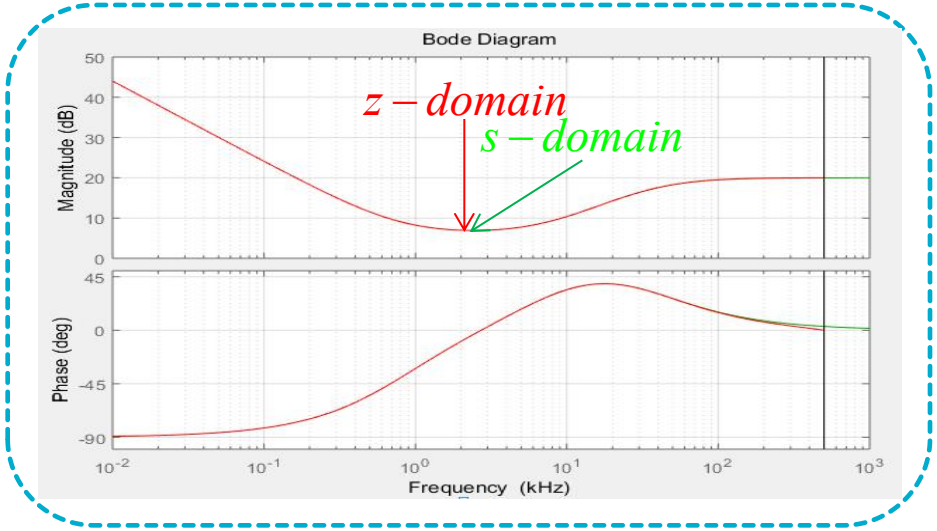

Small signal analysis:

$$H(s)=\frac{-Vo}{Vin}=\frac{(1+SR_2C_2)(1+SR_1C_1)}{SR_1(C_2+C_3)(1+SR_2\frac{C_2C_3}{C_2+C_3})}$$

$$S=\frac{2}{T}\frac{Z-1}{Z+1}$$

```
%Matlab code
clear all;                                  %clear  old data
close all;                                  %close old file
Ts=1*10^(-6)                                %sampling period
num_c=conv([0.2*10^(-3),1],[22*10^(-6),1]);
%numerator
den_c=conv([0.1*10^(-3),0],[4.4*10^(-6),1]);
 %denominator
Cont_s=tf(num_c,den_c) %S domain function
 bode(Cont_s,'g');grid on;hold on;          %S domain  bode
Cont_discret_s=c2d(Cont_s,Ts,'tustin')   %Z domain function
bode(Cont_discret_s,'r');grid on;hold on; %Z  domain bode
[num_z,den_z]=tfdata(Cont_discret_s,'v')%Equation coefficient
```

num_z =9.2066 -17.9582 8.7536
den_z =1.0000 -1.7959 0.7959

$$Y(n)=1.8Y(n-1)-0.8Y(n-2)+9.2X(n)-17.96X(n-2)+8.75X(n-2)$$

three pole with two zero point

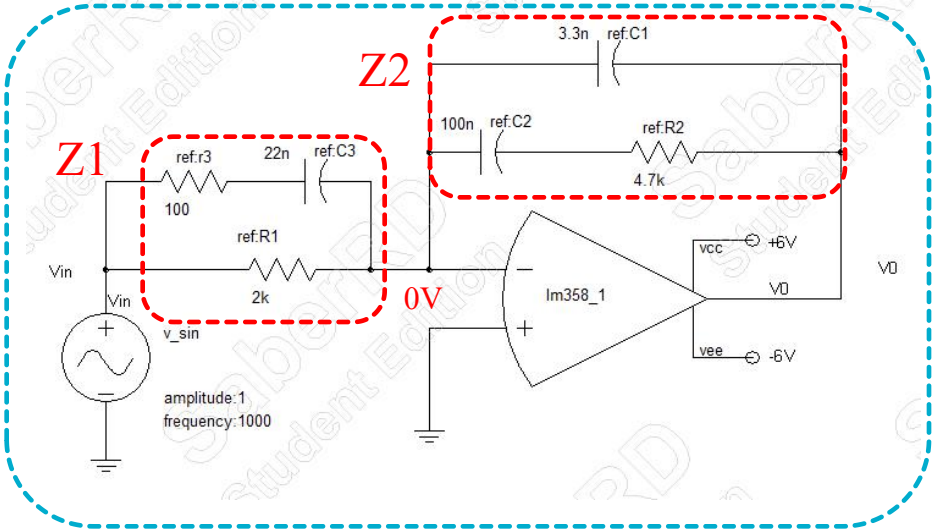

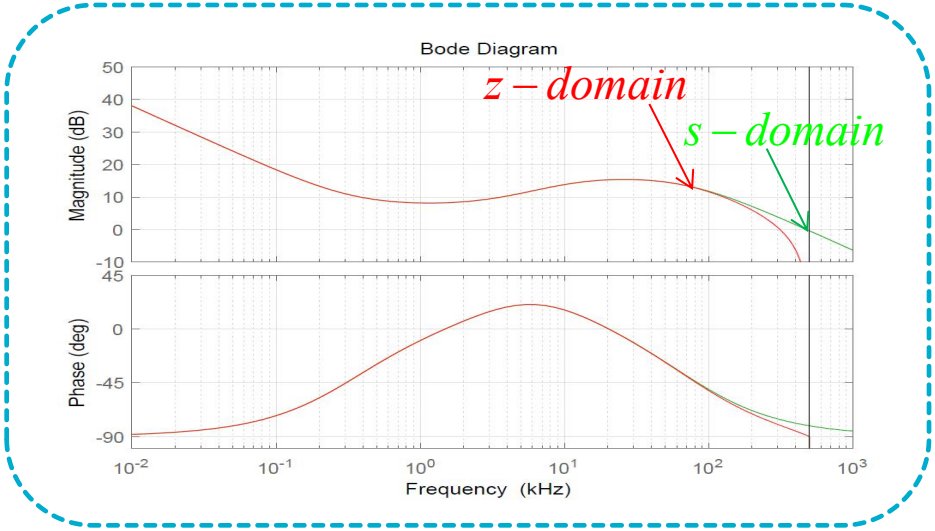

Small signal analysis:

$$H(s)=\frac{-Vo}{Vin}=\frac{R_1+R_3}{R_1R_3C_1}\times\frac{(S+\frac{1}{R_2C_2})(S+\frac{1}{(R_1+R_3)C_3})}{S(S+\frac{C_1+C_2}{R_2C_1C_2})(S+\frac{1}{R_3C_3})}$$

$$S=\frac{2}{T}\frac{Z-1}{Z+1}$$

```
%Matlab code
clear all;                                  %clear old data
close all;                                  %close old file
Ts=1*10^(-6)                                %sampling period
num_c=conv([1,1/(470*10^(-6))],[1,1/(44*10^(-6))]);
%numerator
den_c=conv([0.33*10^(-6),0],conv([1,1/(15.51*10^(-
6))],[1,1/(2.2*10^(-6))]));
 %denominator
Cont_s=tf(num_c,den_c)                      %S domain function
 bode(Cont_s,'g');grid on;hold on;          %S domain  bode
Cont_discret_s=c2d(Cont_s,Ts,'tustin')      %Z domain function
bode(Cont_discret_s,'r');grid on;hold on; %Z  domain bode
[num_z,den_z]=tfdata(Cont_discret_s,'v')%Equation coefficient
```

$$Y(n)=2.567Y(n-1)-2.157Y(n-2)$$
$$+0.59Y(n-3)+1.2109X(n)-1.181X(n-1)$$
$$+1.21X(n-2)+1.18X(n-3)$$

Butterworth low pass filter

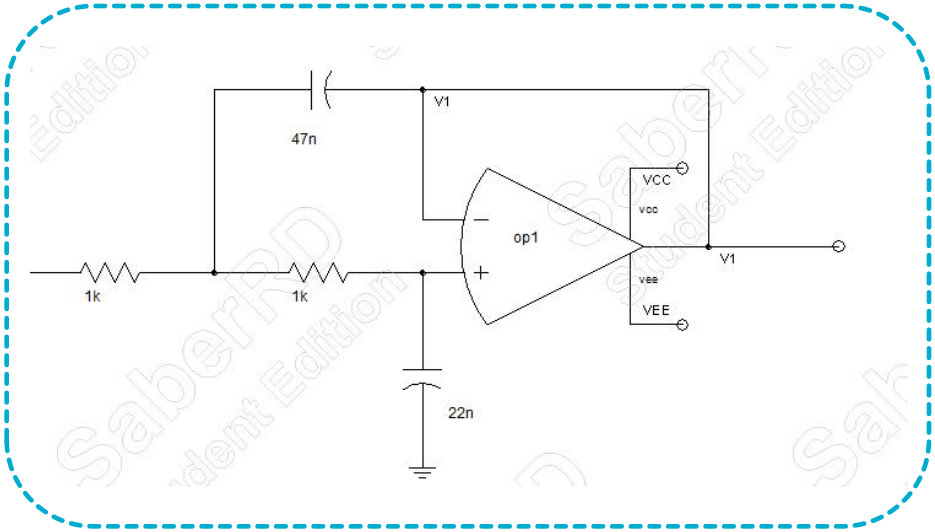

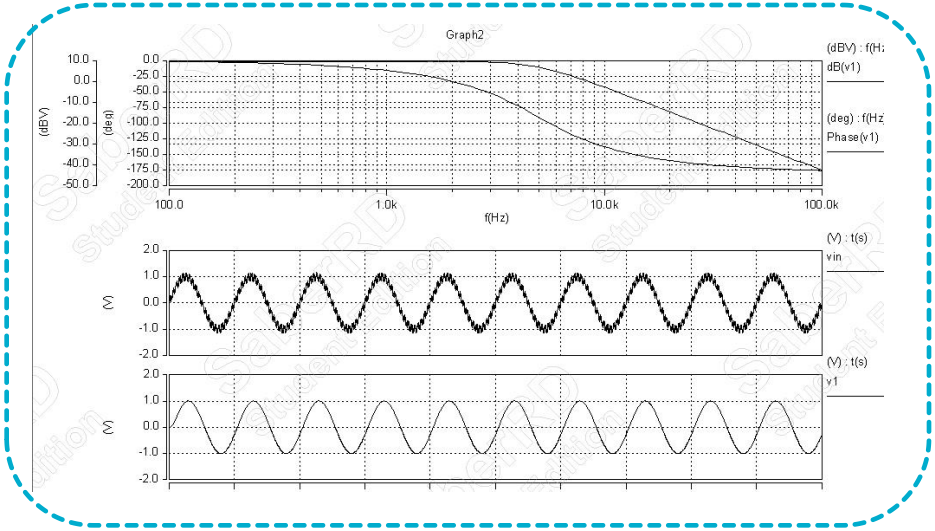

$$H(s)=\frac{1}{2(SRC)^2+2SRC+1}\Big|_{S=\frac{2}{T}\frac{Z-1}{Z+1}}$$

$R=1K\Omega \qquad C=22nF$

```
%Matlab code
clear all;                                  %clear old data
close all;                                  %close old file
Ts=1*10^(-6)                                %sampling period
num_c=1;
%numerator
den_c=conv([0.968*10^(-9),44*10^(-6),1],1);
 %denominator
Cont_s=tf(num_c,den_c) %S domain function
 bode(Cont_s,'g');grid on;hold on;          %S domain  bode
Cont_discret_s=c2d(Cont_s,Ts,'tustin')   %Z domain function
bode(Cont_discret_s,'r');grid on;hold on; %Z  domain bode
[num_z,den_z]=tfdata(Cont_discret_s,'v')%Equation coefficient
```

$$Y(n)=1.95Y(n-1)-0.955Y(n-2)+[0.252X(n)$$
$$+0.505X(n-1)+0.252X(n-2)]\times10^{-3}$$

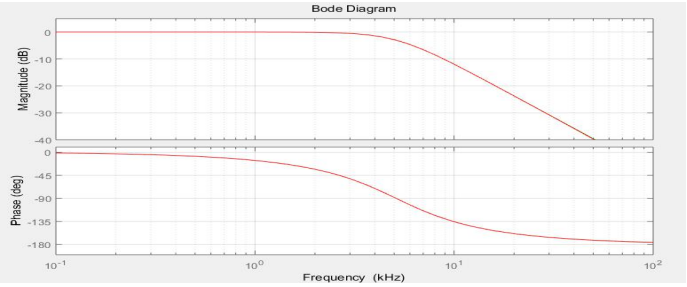

PID

PID control algorithm: Proportion Integration Differentiation

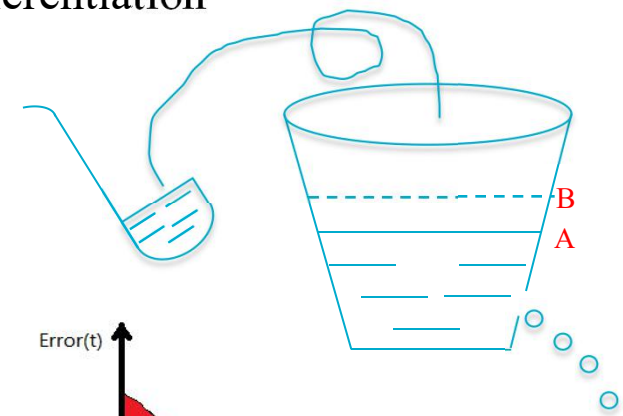

continue domain

$$u(x) = k_p[e(t) + \frac{1}{T_i}\int_0^t e(t)dt + T_d \frac{de(t)}{dt}]$$

discrete domain

$$u(k) = k_p[e(k) + \frac{T}{T_i}\sum_{n=0}^{k} e(n) + \frac{T_d}{T}(e(k) - e(k-1))]$$

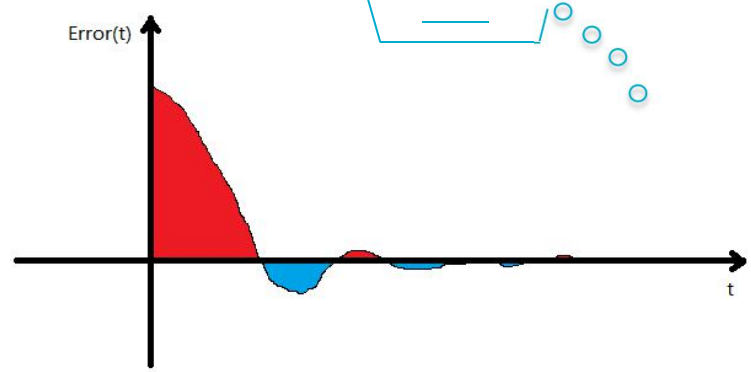

incremental PID algorithm

$$\Delta u(k) = u(k) - u(k-1) = K_p[e(k) - e(k-1)] + k_i e(k) + k_d(e(k) - 2e(k-1) + e(k-2))$$

$$\Delta Y(n) = x(n) - x(n-1) = K_p[e(n) - e(n-1)] + k_i e(n) + k_d(e(n) - 2e(n-1) + e(n-2))$$

https://blog.csdn.net/qq229596421/article/details/51419813

Incremental PID c-code

```
#define max(a, b)          (a>b? a:b)
#define min(a, b)          (a<b? a:b)
#define range(x, a, b)     (min(max(x, a), b))
#define exchange(a, b, tmp) (tmp=a, a=b, b=tmp)
#define myabs(x)           ((x<0)? -x:x)
typedef struct
{   float limit;           //max limit
    float target;          //target voltage
    float feedback;        //pid output to control
    float Kp;
    float Ki;
    float Kd;
    float e_0;             //current error  voltage
    float e_1;             //last error  voltage
    float e_2;             //before last error voltage
}PID;
float pid_calc(PID *pid)
{
    float out;
    float ep, ei, ed;
    pid->e_0 = pid->target - pid->feedback;
    ep = pid->e_0  - pid->e_1;
    ei = pid->e_0;
    ed = pid->e_0 - 2*pid->e_1 + pid->e_2;
    out = pid->Kp*ep + pid->Ki*ei + pid->Kd*ed;
    out = range(out, -pid->limit, pid->limit);
    pid->e_2 = pid->e_1;
    pid->e_1 = pid->e_0;
    return out;
}
```

continue domain

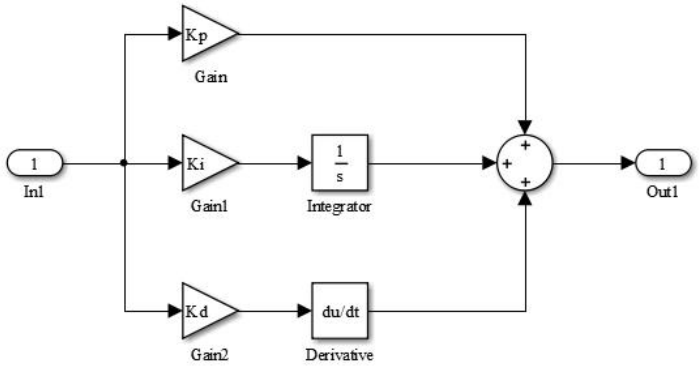

discrete domain

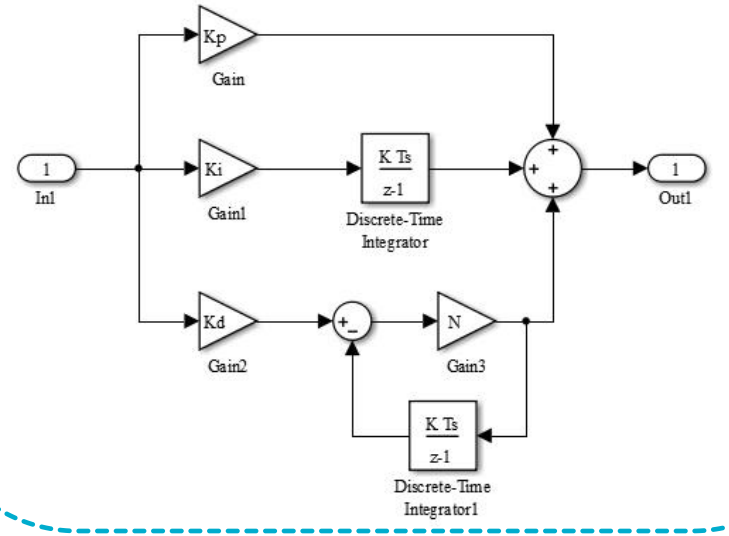

Secondary feedback

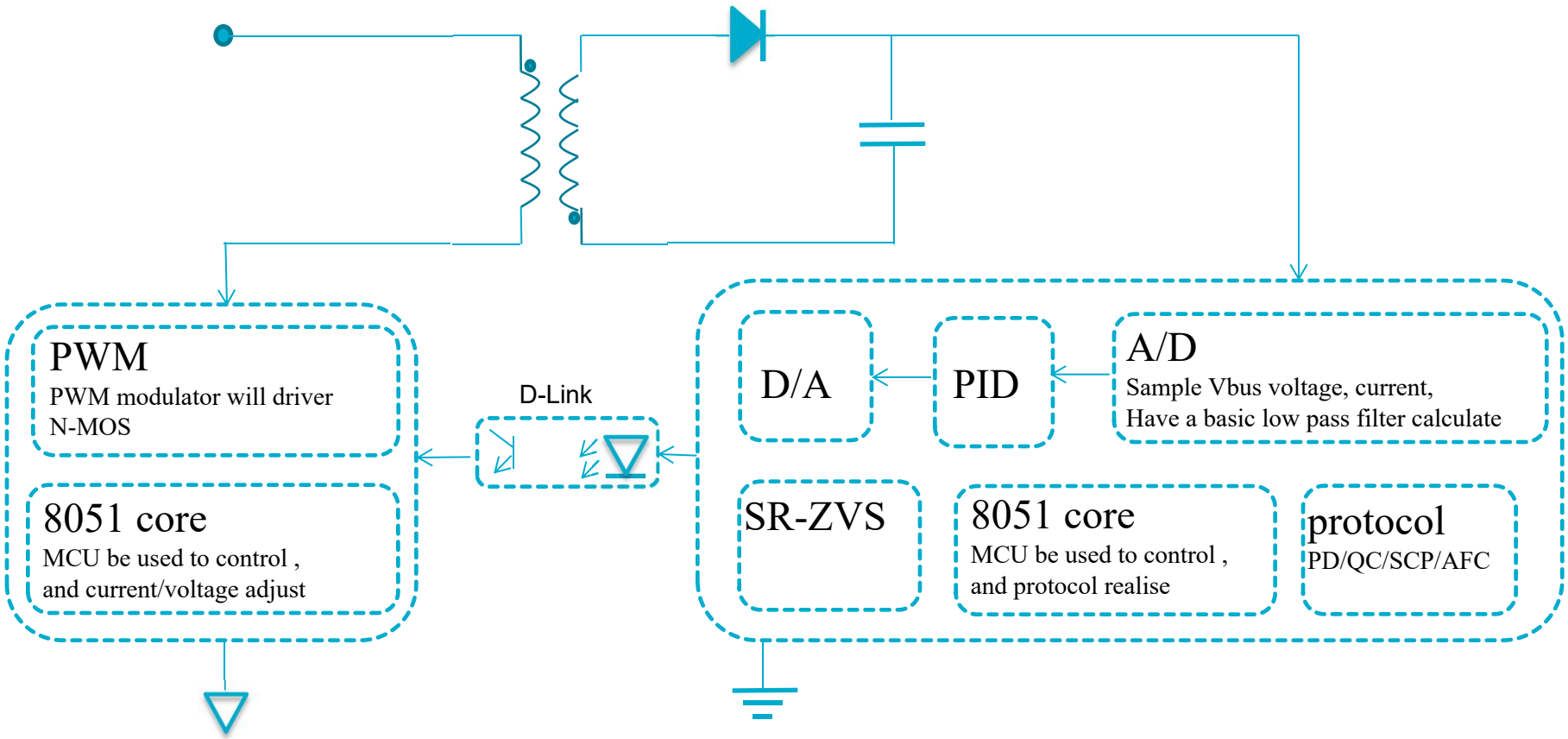

Thanks

…personal
…portable
…connected